۰۲۱-۶۶۲۶۸۹۲۰
۰۲۱-۶۶۲۷۹۰۴
۰۹۱۲۰۸۶۶۱۴۰
فروش انواع موتور ویبره
و دیگر تجهیزات صنعتی
سام تجهیز
samtajhiz.com

INDEX

Certifications page 3

Foot mounted electric vibrators

Electric vibrators	MVSI	page 6
Electric vibrators with split covers	MVSI-TS	page 16
Axial coupling electric vibrators	MVSI-ACC	page 22
Increased safety electric vibrators	MVSI-E	page 24
Electric vibrators in stainless steel	MVSS	page 34
Explosion proof-electric vibrators	CDX	page 42
Explosion proof screen vibrators	MVTX	page 48
Electric vibrators with reduced overall size	MICRO	page 50
Multi-hole fixing electric vibrator	M3	page 52
Increased safety multi-hole fixing electric vibrator	M3-E	page 56
Direct current electric vibrators	MVCC	page 58

Flanged electric vibrators

Electric vibrators with top mounting flange	MTF	page 60
Increased safety electric vibrators with top mounting flange	MTF-E	page 64
Electric vibrators with top mounting flange	MVB	page 68
Electric vibrators with central mounting flange	MVB-FLC	page 68
Increased safety electric vibrators with top mounting flange	MVB-E	page 72
Increased safety electric vibrators with central mounting flange	MVB-E-FLC	page 72
Electric vibrators with double tapered mounting flange	VB	page 76
Increased safety electric vibrators with double tapered mounting flange	VB-E	page 78

Mechanical vibrators

Exciters	VU	page 80

High-frequency electric vibrators

High variable frequency electric vibrators, with fixed and cradle connection	ITV-VR	page 82
High fixed frequency electric vibrators, with fixed and cradle connection	ITVAF	page 82

Accessoires

Electronic vibration frequency drives	VIBRAVAR	page 86
Vibrating frequency regulating panels	CFV	page 88
Mobile vibration frequency regulator	MULTIVAR	page 90
Solutions for prefabrication		page 92

How to choose the right type of electric vibrator page 94

ATEX safety is standard

Product's features						Areas of use					
			Classe de temperature			G-GAS			D-DUST		
Type	**Category**	**Type of protection**	Gas	Dust	**CE type examination certificate**	**0**	**1**	**2**	**20**	**21**	**22**
MVSI-E **M3-E**** **MTF-E** **VB-E** **MVB-E** **MVB-E-FLC**	II 2 G II 2 D	Ex e IIC Gb Ex tb IIIC Db	T3 (200° C) T4 (135° C)	from 120° to 200° C*	**LCIE 06 ATEX 6092 X**						
MVSI **M3**	II 2 D	tD A21 IP66	-	from 120° to 200° C*	**LCIE 05 ATEX 6163 X**						
MVSI-TS	II 2 D	tD A21 IP66	-	from 120° to 170° C*	**LCIE 05 ATEX 6163 X**						
MTF	II 2 D	tD A21 IP66	-	from 120° C to 150° C*	**LCIE 05 ATEX 6163 X**						
VB **MVB***** **MVB-FLC*****	II 2 D	tD A21 IP66	-	from 135° C to 150° C*	**LCIE 05 ATEX 6163 X**						
MVSS-P	II 2 D	IP66	-	120° C	**LCIE 03 ATEX 6005 X**						
CDX	II 2 G II 2 D	Ex d IIB Gb Ex tb IIIC Db	120° C	120° C	**DEMKO 07 ATEX 0612032X**						
CDX gr.110	II 2 G	Ex d IIB	T4 (135° C)	-	**SIRA 00 ATEX 1026**						
CDX-G	II 2 G	Ex d IIB Gb	160° C	-	**DEMKO 07 ATEX 0612032X**						
MVTX	II 2 G II 2 D	Ex d IIB Gb Ex tb IIIC Db	T105° C	105° C	**DEMKO 07 ATEX 1103487X**						
MVTX-G	II 2 G	Ex d IIB	T150° C	-	**DEMKO 07 ATEX 1103487X**						

** Only T4
*** Only model gr. 50

* According to model (See the specific tables in the catalog).

Compatible
Incompatible

How to choose the right Italvibras electric vibrator

To establish which type of electric vibrator is best for the specific use required, the environment in which the electric vibrator is to work must be classified by defining the area, the maximum temperature and, if necessary, the required type of protection. The EN specifications (e.g. EN 60079-10) can be used to conduct these analyses. Once the area has been classified, the tables alongside will allow you to identify the most suitable Italvibras electric vibrator. The technical staff at Italvibras is always at the customers' complete disposal for any further explanations that may be required.

The choice of the electric vibrator on the basis of area

Zone	Products suitable for the area
1, 2, 21, 22 - Ex e	**MVSI-E, M3-E, MTF-E, VB-E, MVB-E, MVB-E-FLC**
21, 22	**MVSI, M3, MVSI-TS, MTF, VB, MVB, MVB-FLC, MVSS-P**
1, 2, 21, 22 - Ex d	**CDX, MVTX**
1, 2 - Ex d	**CDX-G, CDX gr.110, MVTX-G**

ATEX CESI

Production quality assurance notification.
Directive 94/9/CE n° CESI 00 ATEX 061 Q.

Global certifications

	Certificate features	Products
	Class I, Groups CD. Class II, Groups EFG. Operat. Temp. T4 (135°C). Amb. Temp. -20°C÷+40°C	CDX FS 35-40-50-60-70-80, MVTX
	Class I, Groups CD. Operat. Temp. T2C (230°C). Amb. Temp. -20°C÷+60°C	CDX-G FS35-40-50-60-70-80
	Class I, Groups CD. Operat. Temp. T3 (200°C). Amb. Temp. -20°C÷+60°C	MVTX-G
	Class I, Groups CD. Class II, Groups EFG. Operat. Temp. T4 (135°C). Amb. Temp. -20°C÷+40°C	CDX-G FS 110
	Class I, Groups CD. Class II, Groups EFG. Operat. Temp. T4 (135°C). Amb. Temp. -20°C÷+40°C	CDX FS 10-20-30
	Class II, Div. 1, Groups EFG. Operat. Temp.: T3 (200°C) for groups EF, T3B (165°C) for group G.	MVSI-F
	File n. LR100948 Part B. Class 4211 01 - Motors and Generators	MVSI, MTF, MVB, MVB-FLC, VB, MICRO, M3
	Class I, Div. 2, Groups ABCD. Operat. Temp.: T3C (160°C), T3A (180°C) or T3 (200°C).	MVSI-C, MTF-C, MVB-C, MVB-C-FLC, VB-C
	ATEX II 2 D - tD A21 IP66	MVSI, MVSI-TS, MTF, MVB, MVB-FLC, VB
	ATEX II 2 GD - Ex e IIC T3/T4 Gb - Ex tb IIIC T...°C Db	MVSI-E, M3-E, MTF-E, MVB-E, MVB-E-FLC, VB-E
	ATEX II 3 D - Ex tc IIIC T100°C Dc IP65	MICRO
	ATEX II 2 GD - Ex d IIB 120°C Gb - Ex tb IIIC T120°C Db	CDX FS 35-40-50-60-70-80
	ATEX II 2 G - Ex d IIB 160°C Gb	CDX-G FS35-40-50-60-70-80
	ATEX II 2 G - Ex d IIB T4	CDX-G FS 110
	ATEX II 2 GD - Ex d IIB 105°C Gb - Ex tb IIIC T105°C Db	MVTX
	ATEX II 2 G - Ex d IIB 150°C Gb	MVTX-G
	Ex tD A21 IP66	MVSI, MVSI-TS, MTF, MVB, MVB-FLC, VB
	Ex e II T3/T4 - Ex e IIC T3/T4 Gb - Ex tb IIIC T...°C Db IP66	MVSI-E, M3-E, MTF-E, MVB-E, MVB-E-FLC, VB-E
	Ex d IIB T120°C Gb - Ex tb IIIC T120°C Db	CDX FS 35-40-50-60-70-80
	Ex d IIB T160°C Gb	CDX-G FS35-40-50-60-70-80
	Ex d IIB T4	CDX-G FS 110
	Ex d IIB T105°C Gb - Ex tb IIIC T105°C Db	MVTX
	Ex d IIB T150°C Gb	MVTX-G
	DIP A21 IP66	MVSI, MVSI-TS, MTF, MVB, MVB-FLC, VB
	Ex e II T3/T4 - DIP A21 IP66	MVSI-E, M3-E, MTF-E, MVB-E, MVB-E-FLC, VB-E
	Ex d IIB T120°C - DIP A21 IP66 T120°C	CDX FS 35-40-50-60-70-80
	Ex d IIB T160°C	CDX-G FS35-40-50-60-70-80
	Ex d IIB T105°C - DIP A21 IP66 T105°C	MVTX
	Ex d IIB T150°C	MVTX-G
	CIMFR and DGMS for India. Ex d IIB 120°C.	CDX FS 60
	KOSHA Korea - Certificate n° 11-AV4BO-0359 Ex td A21 IP66	MVSI, MTF, MVB, MVB-FLC, M3, VB
	KOSHA Korea - Certificate n° 11-AV4BO-0346/7/8/9/50/51 Ex e II T3/T4 - Ex td A21 IP66	MVSI-E, MTF-E, MVB-E, MVB-E-FLC, M3-E, VB-E
	KOSHA Korea - Certificate n° 11-AV4BO-0353/4/5/6/7/8/60 Ex d IIB 120°C - Ex td A21 IP66 T120°C	CDX FS 35-40-50-60-70-80

Italvibras Deutschland GmbH

Italvibras France Sas

Italvibras Iberica S.L.

Italvibras USA

For us at Italvibras, being the leader means demonstrating on a day-to-day basis that this qualification is motivated by concrete and verifiable facts. It means constantly improving our products, investing in research and cutting-edge technologies, while at the same time working to optimize production costs in order to give our customers a clear competitive advantage. Today, our Italian technology has reached a level of absolute excellence, and this is a real source of pride for us.

Giorgio Silingardi
Founder Italvibras G. Silingardi SpA

italvibras g.silingardi

MVSI

The MVSI series represents the line of reference products for manufacturer's of vibrating machines and plants operating in many industrial sectors and is made up of the largest range on the market, with centrifugal force values up to 30500 Kgf (300kN).

The MVSI series has been conceived to guarantee higher performance in all conditions and environments and complies with the most recent IEC and EN international standards for use in atmospheres with potentially explosive powders.
In particular, the MVSI series can be used in areas 21 and 22.

Technical features

Power supply
Three-phase voltage from 24V to 690V, 50Hz or 60Hz or single-phase 100-130V, 60Hz and 200-240V, 50Hz (single-phase types are supplied without capacitor); suitable for use with an inverter from 20Hz to the base frequency with constant torque load profile.

Polarity
2, 4, 6 and 8 standard poles, 10 and 12 poles on request.

Conformity with European Directives
Low voltage 2006/95/EC; ATEX 94/9/EC.

Reference Regulations
EN 60034-1, IEC/EN 61241-0, IEC/EN 61241-1.

Functioning
Continual service (S1) at maximum declared centrifugal force and electric power. Intermittent services are also possible depending on the type of vibrator and the operating conditions. For detailed information, contact our technical assistance office.

Centrifugal force
Range extended up to 30500 Kgf. (300 kN), with centrifugal force adjustable from 0 to 100%.

Mechanical protection
IP 66 according to IEC 529, EN 60529.

Protection against mechanical impacts
IK 08 according to IEC 68, EN 50102.

Insulation class
Class F (155°C), class H (180°C) on request.

Tropicalization
Standard on all vibrators, with vacuum encapsulation up to gr. AF 33 and 35, with "drop by drop" trickle system for larger sizes.

Ambient temperature
From -20°C to +40°C. Versions for higher or lower temperatures are available on request.

Vibrator thermal protection
Standard PTC rated thermistor heat detectors 130°C (DIN 44081-44082) from size 70, on request for smaller sizes. On request, thermistors with different temperatures and anti-condensation heaters.

Fixing of the vibrator
In all positions and therefore without restriction.

Lubrication
All vibrators are lubricated in the factory and do not require further lubrication if used in normal operating conditions ("FOR LIFE" lubrication). In heavy duty operating conditions periodical re-lubrication may be applied to size 35 and larger.

Terminal box
Large fixed electrical connections. Special shaped terminals allow to fix the power supply cable, protecting it from loosening.

Electric motor
Three-phase asynchronous type. Designed for maximum starting torques and torque curves specific to requirements of vibrating machines. Insulated windings using vacuum encapsulating up to size 35; using the "drop by drop" trickle system with class H resin for larger sizes. The rotor is die cast aluminium.

Casing
In high-tensile aluminium alloy up to size 60, in spheroidal cast iron for larger sizes. Patented shape that improves heat dispersion and lowers normal working temperature at full load.

Bearing flange
Constructed in cast iron (spheroidal or grey) or in aluminium with steel bearing seat. The geometry of the flange transmits the load to the casing uniformly.

Bearings
Custom made with particular geometry, especially designed for Italvibras, suitable to support both high radial and axial loads.

Category: II 2 D

Level of protection: tD A21 IP66

Temperature class: see tab. page 8-15

EC certificate: LCIE 05 ATEX 6163 X

Zones of use: 21, 22

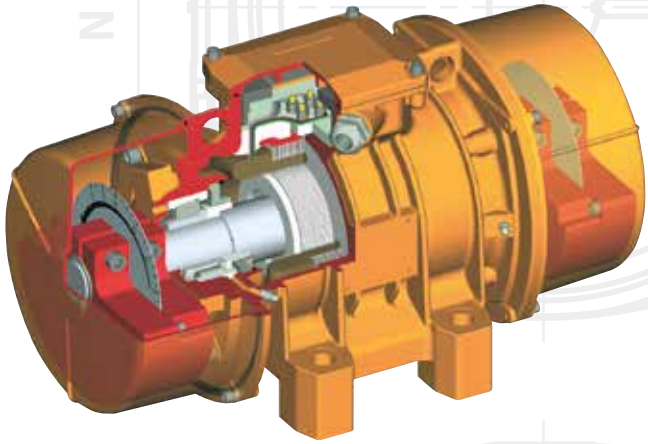

Motor shaft
In treated steel alloy (Isothermic hardening) resistant to stress.

Eccentric weights
Allow continual adjustment of the centrifugal force. This adjustment is realized by a graduated scale, which expresses the centrifugal force as a percentage of the maximum centrifugal force.
A patented system (patent N° MO98A000194), called ARS, prevents adjustment errors.

Weight covers
In aluminium alloy. On several sizes split covers are available, please refer to section MVSI-TS on page 16. On request stainless steel AISI 304 weight covers can be supplied.

Painting
Electrostatic surface treatment based on polymerised epoxy polyester powder in oven at 200°C. Tested in salt spray for 500 hours.

Stainless steel protection
On request, corrosion high grade protection (stainless steel AISI 316L micro suspensions in a polyurethanic paint) is available.

Several sizes are available with different mounting bolt patterns. Please contact sales office at Italvibras.

Certifications

Regulation CAN/CSA - C22.2 N. 100-95, file n° LR100948 Class 4211 01 – Motors and generators.

Comply with the applicable European Union directives

Mechanical protection IP66 (EN 60529), protection against impacts IK 08 (EN 50102)

KOSHA Korea
Certificate n. 11-AVG BO-0359
Ex td A21 IP66

II 2 D, tD A21 IP66
IEC/EN 61241-0, IEC/EN 61241-1
Certificate n. LCIE 05 ATEX 6163X

Upon request available version MVSI-C
Class I, Div. 2, Groups ABCD
standards CAN/CSA-C22.2

Certificate GOST-R n° POCC IT.AB.72.B03026, standards GOST R 51330.0-99, GOST R 51330.8-99, GOST R IEC 61241-1-1-99

Upon request available version MVSI-F
Class II, Div. 1, Groups EFG
standards CAN C22.2, UL 1004-01

Certificate of Conformity
n° IECEx CES 09.0001X
standards IEC 61241-0, IEC 61241-1

italvibras g.silingardi

MVSI

2 poles - 3000/3600 rpm

	Description					Mechanical specifications								Electrical specifications			
						Static moment* kgmm		Centrifugal force kg		Centrifugal force kN		Weight kg		Max input power W		Max. current A	
	Code	Type	SIZE		II2D Temp. class	50 Hz	60 Hz	50 Hz	60 Hz	50 Hz	60 Hz	50 Hz	60 Hz	50 Hz	60 Hz	400 V 50 Hz	460 V 60 Hz
three-phase	600311	**MVSI 3/100-S02**	00	•	120°C	12.0	12.0	**121**	**174**	**1.19**	**1.71**	5.60	5.60	180	180	0.35	0.30
	600312	**MVSI 3/200-S02**	01	•	120°C	21.0	15.0	**211**	**218**	**2.07**	**2.14**	6.40	6.20	180	180	0.35	0.30
	600313	**MVSI 3/300-S02**	10	•	120°C	30.1	20.4	**304**	**297**	**2.98**	**2.91**	9.70	9.20	260	270	0.60	0.50
	600314	**MVSI 3/500-S02**	20	•	120°C	49.9	32.4	**503**	**471**	**4.93**	**4.62**	14.8	13.8	450	500	0.80	0.75
	600366	**MVSI 3/700-S02**	20	•	120°C	72.8	-	**734**	**-**	**7.19**	**-**	15.1	-	450	-	0.80	-
	600381	**MVSI 3/800-S02**	30	•	120°C	78.0	52.0	**785**	**754**	**7.70**	**7.40**	21.0	20.0	650	685	1.10	1.00
	600513	**MVSI 3/1100-S02**	35	•	120°C	110	73.0	**1105**	**1061**	**10.8**	**10.4**	23.0	22.0	1000	1200	1.75	1.75
	600491	**MVSI 3/1300-S08**	AF33	•	200°C	128	91.6	**1290**	**1327**	**12.7**	**13.0**	27.0	25.7	1300	1350	2.10	1.90
	600504	**MVSI 3/1500-S08**	AF33	•	200°C	146	110	**1470**	**1595**	**14.4**	**15.6**	25.3	24.0	1300	1350	2.10	1.90
	600502	**MVSI 3/1600-S02**	50	•	200°C	153	102	**1545**	**1483**	**15.2**	**14.5**	33.0	31.5	1400	1450	2.30	2.00
	600503	**MVSI 3/1800-S02**	50	•	200°C	179	128	**1802**	**1853**	**17.7**	**18.2**	34.0	32.5	2000	2000	3.30	2.90
	600256	**MVSI 3/2010-S90**	AF50	•	200°C	205	128	**2059**	**1853**	**20.2**	**18.2**	48.7	46.3	2200	2200	3.50	3.00
	600257	**MVSI 3/2310-S90**	AF50	•	200°C	230	153	**2316**	**2224**	**22.7**	**21.8**	49.6	47.1	2200	2200	3.50	3.00
	600470	**MVSI 3/3200-S02**	AF70	•	135°C	344	215	**3457**	**3112**	**33.9**	**30.5**	94.0	90.0	4000	4000	6.50	5.60
	600471	**MVSI 3/4000-S02**	AF70	•	135°C	387	258	**3890**	**3735**	**38.2**	**36.6**	96.0	92.0	4000	4000	6.50	5.60
	600472	**MVSI 3/5000-S02**	AF70	•	135°C	515	344	**5187**	**4979**	**50.9**	**48.8**	109	105	5000	5000	7.60	6.90
	600276	**MVSI 3/6510-S02**	90	•	135°C	630	443	**6357**	**6420**	**62.4**	**63.0**	184	178	5500	5500	9.20	8.00
	600201	**MVSI 3/9000-S90**	95	-	135°C	895	619	**9007**	**8970**	**88.4**	**88.0**	215	210	10000	9300	18.0	13.0
																220 V 50 Hz	115 V 60 Hz
Single-phase	600311	**MVSI 3/100-S02**	00	•	120°C	12.0	12.0	**121**	**174**	**1.19**	**1.71**	5.60	5.60	165	165	0.75	1.52
	600312	**MVSI 3/200-S02**	01	•	120°C	21.0	15.0	**211**	**218**	**2.07**	**2.14**	6.40	6.20	165	165	0.75	1.52
	600313	**MVSI 3/300-S02**	10	•	120°C	30.1	20.4	**304**	**297**	**2.98**	**2.91**	9.70	9.20	280	280	1.25	2.40
	600314	**MVSI 3/500-S02**	20	•	120°C	49.9	32.4	**503**	**471**	**4.93**	**4.62**	14.8	13.8	500	500	2.30	4.50
	600366	**MVSI 3/700-S02**	20	•	120°C	72.8	-	**734**	**-**	**7.19**	**-**	15.1	-	500	-	2.30	-
	600381	**MVSI 3/800-S02**	30	•	120°C	78.0	52.0	**785**	**754**	**7.70**	**7.40**	16.8	15.9	700	750	3.25	7.00

* Working moment = 2 x static moment.

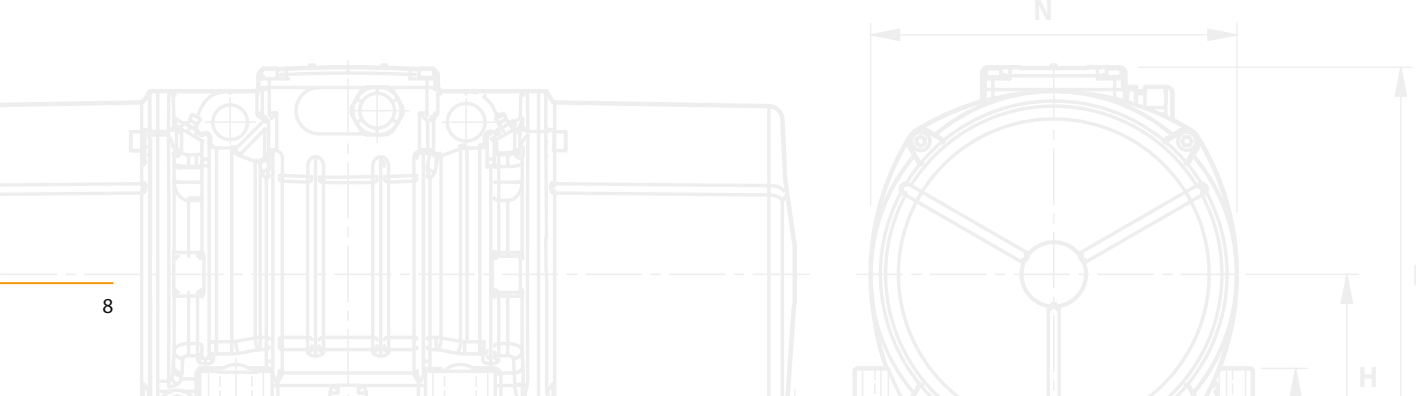

Fig. A

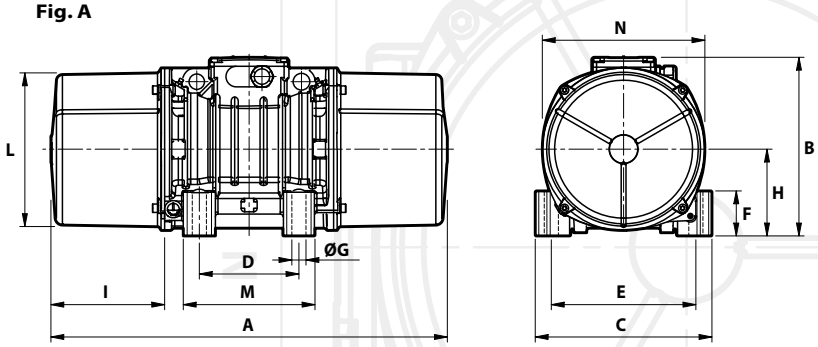

Dimensional specifications (mm)

I_A/I_N 50 Hz	I_A/I_N 60 Hz	Type	Fig.	A	B	C	Holes D	Holes E	Holes øG	Holes N°	F	H	I	L	M	N	Capacitor (µF) 220 V 50 Hz	Capacitor (µF) 115 V 60 Hz	Cable entry thread
2.68	3.00	**MVSI 3/100-S02**	**A**	211	153	125	**62-74****	**106**	**9**	**4**	24	61	46	103	100	117	-	-	M20x1,5
2.68	3.00	**MVSI 3/200-S02**	**A**	235	153	125	**62-74****	**106**	**9**	**4**	24	61	58	103	100	117	-	-	M20x1,5
3.47	4.20	**MVSI 3/300-S02**	**A**	255	179	152	**90**	**125**	**13**	**4**	28	73	54	127	128	141	-	-	M20x1,5
4.21	4.80	**MVSI 3/500-S02**	**A**	288	203	167	**105**	**140**	**13**	**4**	30	82.5	65	145	140	160	-	-	M25x1,5
4.21	-	**MVSI 3/700-S02**	**A**	288	203	167	**105**	**140**	**13**	**4**	30	82.5	65	145	140	160	-	-	M25x1,5
3.83	6.00	**MVSI 3/800-S02**	**A**	308	216	205	**120**	**170**	**17**	**4**	45	93.5	63	170	160	182	-	-	M25x1,5
3.63	4.00	**MVSI 3/1100-S02**	**A**	435	225	205	**120**	**170**	**17**	**4**	54	104.5	117,5	187	162	203	-	-	M25x1,5
3.96	4.98	**MVSI 3/1300-S08**	**A**	375	216.5	215	**100**	**180**	**17**	**4**	47	93,5	106	170	145	182	-	-	M25x1,5
3.96	4.98	**MVSI 3/1500-S08**	**A**	375	216.5	215	**100**	**180**	**17**	**4**	47	93,5	106	170	145	182	-	-	M25x1,5
4.95	6.12	**MVSI 3/1600-S02**	**A**	430	246	230	**140**	**190**	**17**	**4**	54	116	99	207	190	225	-	-	M25x1,5
4.33	5.50	**MVSI 3/1800-S02**	**A**	430	246	230	**140**	**190**	**17**	**4**	54	116	99	207	190	225	-	-	M25x1,5
4.62	6.00	**MVSI 3/2010-S90**	**A**	465	230	230	**140**	**190**	**17**	**4**	49	104	105	186	180	200	-	-	M25x1,5
4.62	6.00	**MVSI 3/2310-S90**	**A**	465	230	230	**140**	**190**	**17**	**4**	49	104	105	186	180	200	-	-	M25x1,5
4.46	5.18	**MVSI 3/3200-S02**	**A**	560	290	310	**155**	**255**	**25**	**4**	90	130	137	238	210	253	-	-	M25x1,5
4.46	5.18	**MVSI 3/4000-S02**	**A**	560	290	310	**155**	**255**	**25**	**4**	90	130	137	238	210	253	-	-	M25x1,5
5.54	7.10	**MVSI 3/5000-S02**	**A**	560	290	310	**155**	**255**	**25**	**4**	90	130	137	238	210	253	-	-	M25x1,5
6.45	7.20	**MVSI 3/6510-S02**	**A**	680	370	390	**200**	**320**	**28**	**4**	90	180	160	330	270	350	-	-	M32x1,5
4.39	5.23	**MVSI 3/9000-S90**	**A**	629	395	392	**200**	**320**	**28**	**4**	100	192	134.5	355	270	375	-	-	M32x1,5
1.67	2.24	**MVSI 3/100-S02**	**A**	211	153	125	**62-74****	**106**	**9**	**4**	24	61	46	103	100	117	10	28	M20x1,5
1.67	2.24	**MVSI 3/200-S02**	**A**	235	153	125	**62-74****	**106**	**9**	**4**	24	61	58	103	100	117	10	28	M20x1,5
2.48	3.52	**MVSI 3/300-S02**	**A**	255	179	152	**90**	**125**	**13**	**4**	28	73	54	127	128	141	16	25	M20x1,5
3.35	4.22	**MVSI 3/500-S02**	**A**	288	203	167	**105**	**140**	**13**	**4**	30	82.5	65	145	140	160	12.5	50	M25x1,5
3.35	-	**MVSI 3/700-S02**	**A**	288	203	167	**105**	**140**	**13**	**4**	30	82.5	65	145	140	160	12.5	-	M25x1,5
4.00	4.14	**MVSI 3/800-S02**	**A**	307	210	205	**120**	**170**	**17**	**4**	45	91.5	51	168	160	178	25	90	M25x1,5

I_A/I_N = ratio between start-up current and maximum current. ** Slot.

Several sizes are available with different mounting bolt patterns. Please contact sales office at Italvibras.

MVSI

4 poles - 1500/1800 rpm

	Description					Mechanical specifications								Electrical specifications			
						Static moment* kgmm		Centrifugal force kg		Centrifugal force kN		Weight kg		Max input power W		Max. current A	
	Code	Type	SIZE	CSA	II2D Temp. class	50 Hz	60 Hz	50 Hz	60 Hz	50 Hz	60 Hz	50 Hz	60 Hz	50 Hz	60 Hz	400 V 50 Hz	460 V 60 Hz
three-phase	601340	**MVSI 15/35-S02**	00	•	120°C	12.0	12.0	**30.2**	**43.5**	**0.30**	**0.43**	5.60	5.60	85	95	0.21	0.20
	601341	**MVSI 15/80-S02**	01	•	120°C	31.0	21.0	**77.9**	**76.1**	**0.76**	**0.75**	6.70	6.40	85	95	0.21	0.20
	601366	**MVSI 15/100-S02**	01	•	120°C	38.9	31.0	**97.9**	**112**	**0.96**	**1.10**	7.10	6.70	85	95	0.21	0.20
	601367	**MVSI 15/200-S02**	10	•	120°C	84.2	58.8	**213**	**214**	**2.09**	**2.10**	12.5	11.7	170	170	0.41	0.40
	601372	**MVSI 15/400-S02**	20	•	120°C	163	113	**412**	**411**	**4.04**	**4.03**	19.0	18.2	300	350	0.60	0.60
	601373	**MVSI 15/550-S02**	20	•	120°C	219	163	**552**	**592**	**5.42**	**5.81**	20.4	19.0	300	350	0.60	0.60
	601408	**MVSI 15/700-S02**	30	•	120°C	286	209	**720**	**760**	**7.06**	**7.46**	27.5	26.2	525	665	0.92	0.98
	601513	**MVSI 15/900-S02**	30	•	120°C	357	286	**900**	**1037**	**8.83**	**10.2**	30.0	27.5	525	665	0.92	0.98
	601524	**MVSI 15/1100-S02**	35	•	120°C	415	271	**1045**	**982**	**10.3**	**9.63**	35.0	30.5	550	680	0.95	0.95
	601217	**MVSI 15/1410-S02**	40	•	120°C	561	400	**1413**	**1449**	**13.9**	**14.2**	44.0	41.0	900	1050	1.45	1.50
	601219	**MVSI 15/1710-S02**	50	•	150°C	715	485	**1798**	**1757**	**17.6**	**17.2**	51.0	48.5	1100	1200	2.00	1.90
	601267	**MVSI 15/2000-S02**	50	•	170°C	817	561	**2054**	**2033**	**20.1**	**19.9**	55.5	51.5	1350	1450	2.50	2.30
	601220	**MVSI 15/2410-S08**	60	•	150°C	962	674	**2420**	**2444**	**23.7**	**24.0**	71.0	66.0	1600	1700	3.20	3.00
	601268	**MVSI 15/3000-S08**	60	•	135°C	1235	858	**3106**	**3107**	**30.5**	**30.5**	80.0	73.5	1900	2000	3.80	3.50
	601221	**MVSI 15/3810-S02**	70	•	135°C	1526	1034	**3840**	**3744**	**37.7**	**36.7**	119	110	2200	2500	3.90	3.90
	601269	**MVSI 15/4300-S02**	70	•	135°C	1720	1173	**4326**	**4250**	**42.4**	**41.7**	123	117	2500	2800	4.80	4.65
	601211	**MVSI 15/5010-S02**	80	•	135°C	1990	1364	**5007**	**4941**	**49.1**	**48.5**	161	153	3600	3400	6.00	5.00
	601447	**MVSI 15/6000-S02**	80	•	135°C	2248	1677	**5654**	**6075**	**55.5**	**59.6**	163.5	155	3600	3400	6.00	5.00
	601165	**MVSI 15/7000-S02**	90	•	135°C	2598	1822	**6536**	**6600**	**64.1**	**64.7**	198	185	6000	6000	10.5	9.00
	601166	**MVSI 15/9000-S90**	95	□	135°C	3260	2260	**8199**	**8183**	**80.4**	**80.3**	225	210	7000	8000	11.6	11.5
	601204	**MVSI 15/9500-S02**	97	□	135°C	3346	2462	**8416**	**8916**	**82.6**	**87.5**	317	303	7500	8500	12.2	12.0
	601205	**MVSI 15/11500-S90**	100	□	135°C	4544	3166	**11430**	**11467**	**112**	**112**	433	411	10000	10500	17.5	15.5
	601271	**MVSI 15/14500-S90**	100	□	135°C	5614	4126	**14120**	**14940**	**138**	**147**	458	424	11000	12000	20.0	20.0
																220 V 50 Hz	115 V 60 Hz
single-phase	601340	**MVSI 15/35-S02**	00	•	120°C	12.0	12.0	**30.2**	**43.5**	**0.30**	**0.43**	5.60	5.60	90	100	0.43	1.00
	601341	**MVSI 15/80-S02**	01	•	120°C	31.0	21.0	**77.9**	**76.1**	**0.76**	**0.75**	6.70	6.40	90	100	0.43	1.00
	601366	**MVSI 15/100-S02**	01	•	120°C	38.9	31.0	**97.9**	**112**	**0.96**	**1.10**	7.10	6.70	90	100	0.43	1.00
	601367	**MVSI 15/200-S02**	10	•	120°C	84.2	58.8	**213**	**214**	**2.09**	**2.10**	12.5	11.7	210	230	1.00	2.00
	601372	**MVSI 15/400-S02**	20	•	120°C	163	113	**412**	**411**	**4.04**	**4.03**	19.0	18.2	240	320	1.20	2.80
	601373	**MVSI 15/550-S02**	20	•	120°C	219	163	**552**	**592**	**5.42**	**5.81**	20.4	19.0	240	320	1.20	2.80
	601408	**MVSI 15/700-S02**	30	•	120°C	286	209	**720**	**760**	**7.06**	**7.46**	27.5	26.2	450	550	2.15	5.15

* * Working moment = 2 x static moment.

□ CSA certification on request, with feeding line included.

Fig. A

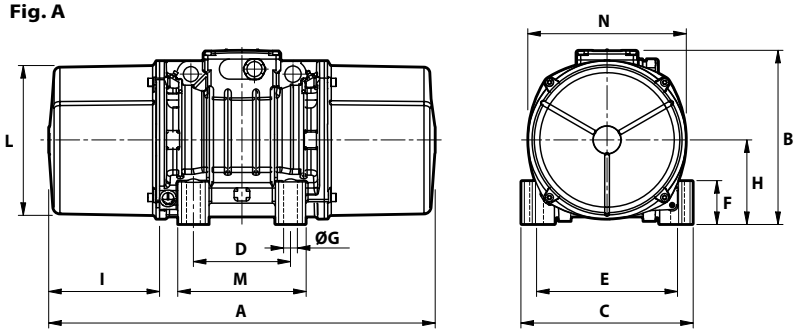

Fig. C

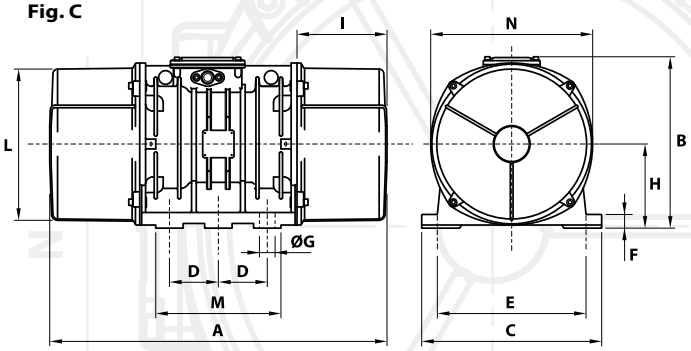

Dimensional specifications (mm)

I_A/I_N 50 Hz	I_A/I_N 60 Hz	Type	Fig.	A	B	C	Holes D	Holes E	Holes øG	Holes N°	F	H	I	L	M	N	Capacitor (µF) 220 V 50 Hz	Capacitor (µF) 115 V 60 Hz	Cable entry thread
1.78	1.95	**MVSI 15/35-S02**	**A**	211	153	125	**62-74****	**106**	**9**	**4**	24	61	46	103	100	117	-	-	M20x1,5
1.78	1.95	**MVSI 15/80-S02**	**A**	235	153	125	**62-74****	**106**	**9**	**4**	24	61	58	103	100	117	-	-	M20x1,5
1.78	1.95	**MVSI 15/100-S02**	**A**	249 (50Hz) 235 (60Hz)	153	125	**62-74****	**106**	**9**	**4**	24	61	65 (50Hz) 58 (60Hz)	103	100	117	-	-	M20x1,5
2.34	2.75	**MVSI 15/200-S02**	**A**	301	179	152	**90**	**125**	**13**	**4**	28	73	77	127	128	141	-	-	M20x1,5
3.33	3.50	**MVSI 15/400-S02**	**A**	344	203	167	**105**	**140**	**13**	**4**	30	82.5	93	145	140	160	-	-	M25x1,5
3.33	3.50	**MVSI 15/550-S02**	**A**	386	203	167	**105**	**140**	**13**	**4**	30	82.5	114	145	140	160	-	-	M25x1,5
3.48	3.43	**MVSI 15/700-S02**	**A**	394	216	205	**120**	**170**	**17**	**4**	45	93.5	106	170	160	182	-	-	M25x1,5
3.48	3.43	**MVSI 15/900-S02**	**A**	394	216	205	**120**	**170**	**17**	**4**	45	93.5	106	170	160	182	-	-	M25x1,5
4.45	4.89	**MVSI 15/1100-S02**	**A**	435	225	205	**120**	**170**	**17**	**4**	54	104.5	117.5	187	162	203	-	-	M25x1,5
4.10	4.20	**MVSI 15/1410-S02**	**A**	448	246	230	**140**	**190**	**17**	**4**	54	116	108	207	190	225	-	-	M25x1,5
4.29	4.89	**MVSI 15/1710-S02**	**A**	500	246	230	**140**	**190**	**17**	**4**	54	116	134	207	190	225	-	-	M25x1,5
4.30	4.90	**MVSI 15/2000-S02**	**A**	574 (50Hz) 500 (60Hz)	246	230	**140**	**190**	**17**	**4**	54	116	171 (50Hz) 134 (60Hz)	207	190	225	-	-	M25x1,5
6.09	7.23	**MVSI 15/2410-S08**	**A**	537	272	275	**155**	**225**	**22**	**4**	70	130	137	238	210	253	-	-	M25x1,5
6.15	7.50	**MVSI 15/3000-S08**	**A**	617	272	275	**155**	**225**	**22**	**4**	70	130	177	238	210	253	-	-	M25x1,5
7.11	6.92	**MVSI 15/3810-S02**	**A**	584	321	310	**155**	**255**	**23.5**	**4**	77	157	137	277	215	295	-	-	M25x1,5
5.90	5.81	**MVSI 15/4300-S02**	**A**	666 (50Hz) 584 (60Hz)	321	310	**155**	**255**	**23.5**	**4**	77	157	178 (50Hz) 137 (60Hz)	277	215	295	-	-	M25x1,5
7.02	8.00	**MVSI 15/5010-S02**	**A**	630	347	340	**180**	**280**	**26**	**4**	80	165	150	303	240	320	-	-	M32x1,5
7.02	8.00	**MVSI 15/6000-S02**	**A**	630	347	340	**180**	**280**	**26**	**4**	80	165	150	303	240	320	-	-	M32x1,5
6.48	7.67	**MVSI 15/7000-S02**	**A**	680	370	390	**200**	**320**	**28**	**4**	90	180	160	330	270	350	-	-	M32x1,5
5.43	5.57	**MVSI 15/9000-S90**	**A**	629	395	392	**200**	**320**	**28**	**4**	100	192	134,5	355	270	375	-	-	M32x1,5
6.56	6.67	**MVSI 15/9500-S02**	**C**	862	437	460	**125**	**380**	**39**	**6**	35	215	230	387	320	414	-	-	M32x1,5
7.03	8.00	**MVSI 15/11500-S90**	**C**	990	454	530	**140**	**440**	**45**	**6**	38	230	240	423	370	448	-	-	M32x1,5
8.00	8.00	**MVSI 15/14500-S90**	**C**	990	454	530	**140**	**440**	**45**	**6**	38	230	240	423	370	448	-	-	M32x1,5
1.20	1.30	**MVSI 15/35-S02**	**A**	211	153	125	**62-74****	**106**	**9**	**4**	24	61	46	103	100	117	3.15	25	M20x1,5
1.20	1.30	**MVSI 15/80-S02**	**A**	235	153	125	**62-74****	**106**	**9**	**4**	24	61	58	103	100	117	3.15	25	M20x1,5
1.20	1.30	**MVSI 15/100-S02**	**A**	249 (50Hz) 235 (60Hz)	153	125	**62-74****	**106**	**9**	**4**	24	61	65 (50Hz) 58 (60Hz)	103	100	117	3.15	25	M20x1,5
1.50	1.85	**MVSI 15/200-S02**	**A**	301	179	152	**90**	**125**	**13**	**4**	28	73	77	127	128	141	5	25	M20x1,5
2.50	2.21	**MVSI 15/400-S02**	**A**	344	203	167	**105**	**140**	**13**	**4**	30	82.5	93	145	140	160	32/12 ⚬	35	M25x1,5
2.50	2.21	**MVSI 15/550-S02**	**A**	386	203	167	**105**	**140**	**13**	**4**	30	82.5	114	145	140	160	32/12 ⚬	40/35 ⚬	M25x1,5
5.44	3.63	**MVSI 15/700-S02**	**A**	381	210	205	**120**	**170**	**17**	**4**	45	91.5	88	168	160	178	96/16 ⚬	160/40 ⚬	M25x1,5

I_A/I_N = ratio between start-up current and maximum current. ** Slot ⚬ Start-up capacitor / *Running capacitor.*

Several sizes are available with different mounting bolt patterns. Please contact sales office at Italvibras.

MVSI

6 poles - 1000/1200 rpm

						Description				Mechanical specifications								Electrical specifications			
										Static moment* kgmm		Centrifugal force kg		Centrifugal force kN		Weight kg		Max input power W		Max. current A 400 V	Max. current A 460 V
	Code	Type	SIZE		II2D Temp. class					50 Hz	60 Hz	50 Hz	60 Hz	50 Hz	60 Hz	50 Hz	60 Hz	50 Hz	60 Hz	50 Hz	60 Hz
three-phase	602296	**MVSI 10/40-S02**	10	•	120°C					30.1	30.1	**35.0**	**49.0**	**0.331**	**0.476**	9.70	9.70	120	135	0.30	0.30
	602297	**MVSI 10/100-S02**	10	•	120°C					84.2	84.2	**94.3**	**136**	**0.925**	**1.33**	12.5	12.5	120	135	0.30	0.30
	602298	**MVSI 10/200-S02**	20	•	120°C					163	163	**183**	**264**	**1.80**	**2.59**	19.0	19.0	185	205	0.50	0.50
	602314	**MVSI 10/310-S02**	30	•	120°C					286	209	**321**	**338**	**3.15**	**3.32**	27.5	26.2	350	380	0.72	0.68
	602402	**MVSI 10/550-S02**	35	•	120°C					457	457	**512**	**737**	**5.02**	**7.23**	36.5	36.5	350	380	0.75	0.68
	602403	**MVSI 10/650-S02**	35	•	120°C					580	457	**650**	**737**	**6.37**	**7.23**	41.0	36.5	350	380	0.75	0.68
	602380	**MVSI 10/810-S08**	40	•	135°C					723	561	**809**	**905**	**7.94**	**8.88**	48.0	44.0	680	760	1.40	1.35
	602381	**MVSI 10/1110-S08**	50	•	135°C					1012	715	**1132**	**1151**	**11.1**	**11.3**	58.0	51.0	750	750	1.65	1.50
	602382	**MVSI 10/1400-S08**	50	•	170°C					1274	921	**1424**	**1483**	**14.0**	**14.5**	66.0	59.5	950	1000	1.80	1.70
	602406	**MVSI 10/1610-S08**	60	•	135°C					1464	962	**1638**	**1549**	**16.1**	**15.2**	83.0	71.0	1100	1300	2.20	2.20
	602407	**MVSI 10/2100-S08**	60	•	200°C					1927	1318	**2154**	**2102**	**21.1**	**20.6**	93.0	82.0	1500	1770	3.00	2.75
	602167	**MVSI 10/2610-S02**	70	•	135°C					2326	1720	**2601**	**2747**	**25.5**	**26.9**	130	116	1960	2100	4.10	3.75
	602230	**MVSI 10/3000-S02**	70	•	135°C					2690	1940	**3007**	**3124**	**29.5**	**30.6**	145	130	2200	2400	4.50	4.30
	602154	**MVSI 10/3810-S02**	80	•	135°C					3422	2380	**3826**	**3831**	**37.5**	**37.6**	188	170	2500	3000	5.10	5.00
	602204	**MVSI 10/4700-S02**	80	•	135°C					4206	2887	**4701**	**4648**	**46.1**	**46.0**	204	183	3200	3600	6.50	6.00
	602350	**MVSI 10/5150-S02**	80	•	135°C					4678	3230	**5230**	**5200**	**51.3**	**51.0**	225	200	3200	3600	6.50	6.00
	602138	**MVSI 10/5200-S02**	90	•	135°C					4658	3288	**5208**	**5293**	**51.1**	**51.9**	228	205	3800	4000	7.00	6.50
	602351	**MVSI 10/5700-S02**	90	•	135°C					5044	3490	**5650**	**5620**	**55.4**	**55.1**	230	210	3800	4000	7.00	6.50
	602091	**MVSI 10/6500-S02**	90	•	135°C					5838	4055	**6527**	**6529**	**64.0**	**64.0**	258	248	4300	5000	8.20	8.10
	602136	**MVSI 10/6600-S02**	97	•	135°C					6083	3979	**6799**	**6405**	**66.7**	**62.8**	285	257	5000	5900	10.0	9.80
	602352	**MVSI 10/7000-S02**	90	•	135°C					6272	4348	**7013**	**7000**	**68.8**	**68.7**	265	253	4300	5000	8.20	8.10
	602092	**MVSI 10/8000-S90**	95	▫	135°C					7197	4967	**8046**	**7996**	**78.9**	**78.4**	315	277	7000	7500	12.6	11.3
	602093	**MVSI 10/9000-S90**	95	▫	135°C					7752	5385	**8666**	**8669**	**85.0**	**85.0**	326	289	7500	8200	14.0	12.9
	602137	**MVSI 10/10000-S02**	97	▫	135°C					8673	5664	**9695**	**9117**	**95.1**	**89.4**	381	340	7600	8000	13.5	12.4
	602349	**MVSI 10/11200-S02**	97	▫	135°C					9983	6896	**11160**	**11100**	**109**	**109**	405	370	7600	8000	13.5	12.4
	602134	**MVSI 10/12000-S90**	100	▫	135°C					10996	7543	**12294**	**12141**	**119**	**119**	500	445	9000	9500	16.3	15.0
	602227	**MVSI 10/13000-S02**	97	▫	135°C					11510	8158	**12867**	**13130**	**126**	**129**	457	382	9600	10000	17.0	16.0
	602142	**MVSI 10/15000-S02**	105	▫	135°C					12662	8700	**14155**	**14004**	**139**	**137**	643	605	10600	11270	19.0	18.0
	602143	**MVSI 10/17500-S02**	105	▫	135°C					15500	10439	**17327**	**16804**	**170**	**165**	705	656	13000	13700	24.5	23.0
	602244	**MVSI 10/19500-S02**	105	▫	135°C					17947	11430	**20062**	**18400**	**197**	**181**	711	661	14000	14800	25.5	24.0
	602144	**MVSI 10/22000-S90**	110	▫	135°C					20025	12533	**22386**	**20208**	**220**	**198**	926	896	19000	19000	33.0	25.5
	602273	**MVSI 10/25000-S90**	110	▫	135°C					22364	14785	**25000**	**23800**	**245**	**233**	955	928	19000	19000	33.0	25.5
	602336	**MVSI 10/30000-S02**	120	-	-					27285	18760	**30560**	**30200**	**300**	**296**	1200	1050	24000	25800	40.0	38.0

* Working moment = 2 x static moment. ▲ For special application. ▫ CSA certification on request, with feeding line included.

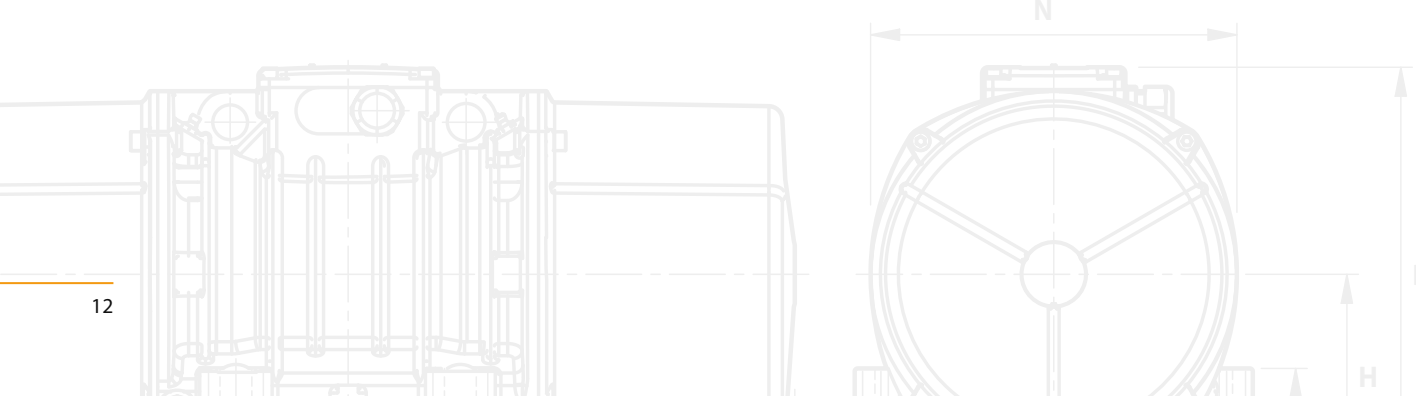

Fig. A

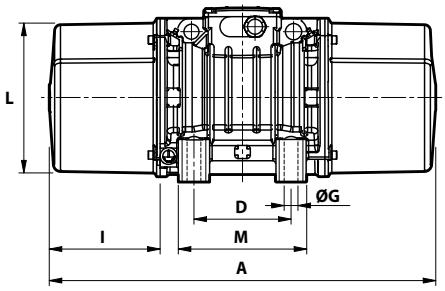

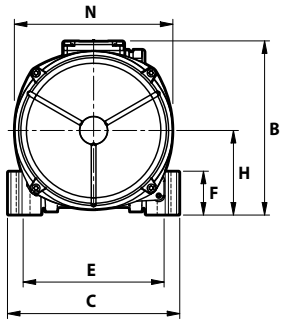

Fig. C

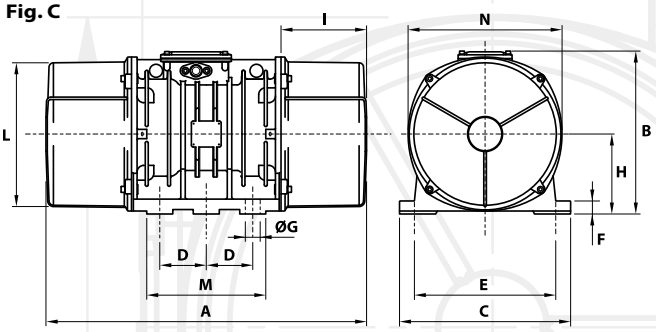

Dimensional specifications (mm)

I_A/I_N 50 Hz	I_A/I_N 60 Hz	Type	Fig.	A	B	C	D	E	Holes øG	Holes N°	F	H	I	L	M	N	Cable entry thread
1.90	2.07	**MVSI 10/40-S02**	**A**	255	179	152	**90**	**125**	**13**	**4**	28	73	54	127	128	141	M20x1,5
1.90	2.07	**MVSI 10/100-S02**	**A**	301	179	152	**90**	**125**	**13**	**4**	28	73	77	127	128	141	M20x1,5
2.72	3.10	**MVSI 10/200-S02**	**A**	344	203	167	**105**	**140**	**13**	**4**	30	82.5	93	145	140	160	M25x1,5
2.63	2.79	**MVSI 10/310-S02**	**A**	394	216	205	**120**	**170**	**17**	**4**	45	93.5	106	170	160	182	M25x1,5
2.53	3.68	**MVSI 10/550-S02**	**A**	435	225	205	**120**	**170**	**17**	**4**	54	104.5	117.5	187	162	203	M25x1,5
2.53	3.68	**MVSI 10/650-S02**	**A**	480 (50Hz) 435 (60Hz)	225	205	**120**	**170**	**17**	**4**	54	104.5	140 (50Hz) 117,5 (60Hz)	187	162	203	M25x1,5
2.79	3.33	**MVSI 10/810-S08**	**A**	500 (50Hz) 448 (60Hz)	246	230	**140**	**190**	**17**	**4**	54	116	134 (50Hz) 108 (60Hz)	207	190	225	M25x1,5
3.33	4.13	**MVSI 10/1110-S08**	**A**	574	246	230	**140**	**190**	**17**	**4**	54	116	171	207	190	225	M25x1,5
3.05	3.65	**MVSI 10/1400-S08**	**A**	574	246	230	**140**	**190**	**17**	**4**	54	116	171	207	190	225	M25x1,5
4.21	4.05	**MVSI 10/1610-S08**	**A**	617 (50Hz) 537 (60Hz)	272	275	**155**	**225**	**22**	**4**	70	130	177 (50Hz) 137 (60Hz)	238	210	253	M25x1,5
3.42	4.00	**MVSI 10/2100-S08**	**A**	663 (50Hz) 617 (60Hz)	272	275	**155**	**225**	**22**	**4**	70	130	200 (50Hz) 177 (60Hz)	238	210	253	M25x1,5
5.35	5.60	**MVSI 10/2610-S02**	**A**	666	321	310	**155**	**255**	**23.5**	**4**	77	157	178	277	215	295	M25x1,5
4.35	4.81	**MVSI 10/3000-S02**	**A**	712	321	310	**155**	**255**	**23.5**	**4**	77	157	201	277	215	295	M25x1,5
5.91	6.00	**MVSI 10/3810-S02**	**A**	734	347	340	**180**	**280**	**26**	**4**	80	165	202	303	240	320	M32x1,5
5.24	5.50	**MVSI 10/4700-S02**	**A**	796	347	340	**180**	**280**	**26**	**4**	80	165	233	303	240	320	M32x1,5
5.24	5.50	**MVSI 10/5150-S02**	**A**	826	347	340	**180**	**280**	**26**	**4**	80	165	248	303	240	320	M32x1,5
4.71	5.08	**MVSI 10/5200-S02**	**A**	744	370	390	**200**	**320**	**28**	**4**	90	180	192	330	270	350	M32x1,5
4.71	5.08	**MVSI 10/5700-S02**	**A**	840	370	390	**200**	**320**	**28**	**4**	90	180	240	330	270	350	M32x1,5
4.51	5.83	**MVSI 10/6500-S02**	**A**	840	370	390	**200**	**320**	**28**	**4**	90	180	240	330	270	350	M32x1,5
5.61	5.82	**MVSI 10/6600-S02** △	**C**	750	437	460	**125**	**380**	**39**	**6**	35	215	174	387	320	414	M32x1,5
4.51	5.83	**MVSI 10/7000-S02**	**A**	840	370	390	**200**	**320**	**28**	**4**	90	180	240	330	270	350	M32x1,5
4.59	5.58	**MVSI 10/8000-S90**	**A**	870	395	392	**200**	**320**	**28**	**4**	100	192	255	355	270	375	M32x1,5
4.13	4.88	**MVSI 10/9000-S90**	**A**	870	395	392	**200**	**320**	**28**	**4**	100	192	255	355	270	375	M32x1,5
4.72	4.92	**MVSI 10/10000-S02**	**C**	862	437	460	**125**	**380**	**39**	**6**	35	215	230	387	320	414	M32x1,5
4.72	4.92	**MVSI 10/11200-S02**	**C**	912	437	460	**125**	**380**	**39**	**6**	35	215	255	387	320	414	M32x1,5
5.21	5.73	**MVSI 10/12000-S90** △	**C**	990	454	530	**140**	**440**	**45**	**6**	38	230	240	423	370	448	M32x1,5
4.98	5.00	**MVSI 10/13000-S02**	**C**	1002	437	460	**125**	**380**	**39**	**6**	35	215	300	387	320	414	M32x1,5
5.88	5.78	**MVSI 10/15000-S02**	**F**	960	526	570	**140**	**480**	**45**	**8**	41	268	200	486	510	516	M32x1,5
5.71	5.96	**MVSI 10/17500-S02**	**F**	1040	526	570	**140**	**480**	**45**	**8**	41	268	240	486	510	516	M32x1,5
5.49	-	**MVSI 10/19500-S02**	**F**	1120	526	570	**140**	**480**	**45**	**8**	41	268	280	486	510	516	M32x1,5
4.67	5.88	**MVSI 10/22000-S90**	**F**	1150	607	610	**140**	**520**	**45**	**8**	38	297	297.5	542	510	582	M32x1,5
4.67	-	**MVSI 10/25000-S90**	**F**	1150	607	610	**140**	**520**	**45**	**8**	38	297	297.5	542	510	582	M32x1,5
4.89	5.39	**MVSI 10/30000-S02**	**Q**	1205	648	700	**140**	**600**	**45**	**8**	45	320	310	600	510	660	M32x1,5

I_A/I_N = ratio between start-up current and maximum current.

Several sizes are available with different mounting bolt patterns. Please contact sales office at Italvibras.

Fig. F

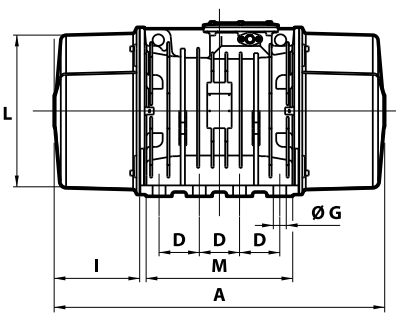

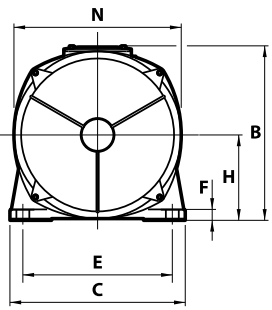

Fig. Q

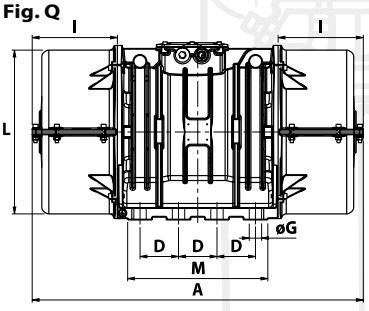

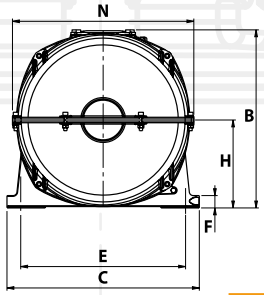

MVSI

8 poles - 750/900 rpm

three-phase	Description					Mechanical specifications								Electrical specifications			
	Code	Type	SIZE		II2D Temp. class	Static moment* kgmm		Centrifugal force kg		Centrifugal force kN		Weight kg		Max input power W		Max. current A 400 V	Max. current A 460 V
						50 Hz	60 Hz	50 Hz	60 Hz	50 Hz	60 Hz	50 Hz	60 Hz	50 Hz	60 Hz	50 Hz	60 Hz
	602568	**MVSI 075/150-S02**	20	•	130°C	163	163	**104**	**149**	**1.02**	**1.46**	19.0	19.0	230	250	0.85	0.76
	602575	**MVSI 075/250-S02**	30	•	130°C	286	286	**181**	**260**	**1.76**	**2.55**	27.5	27.5	350	380	1.10	1.05
	602645	**MVSI 075/260-S02**	35	•	-	275	275	**174**	**250**	**1.71**	**2.45**	30.0	30.0	375	410	0.81	0.80
	602615	**MVSI 075/400-S02**	35	•	-	457	457	**288**	**415**	**2.83**	**4.07**	36.5	36.5	375	410	0.81	0.80
	602616	**MVSI 075/530-S02**	35	•	-	580	580	**365**	**528**	**3.60**	**5.20**	41.0	41.0	375	410	0.81	0.80
	602609	**MVSI 075/660-S08**	40	•	120°C	723	723	**456**	**656**	**4.47**	**6.44**	48.0	48.0	400	450	1.20	1.20
	602610	**MVSI 075/910-S08**	50	•	120°C	1012	1012	**637**	**917**	**6.25**	**9.00**	58.0	58.0	400	500	1.40	1.30
	602618	**MVSI 075/1310-S08**	60	•	150°C	1464	1464	**922**	**1327**	**9.04**	**13.0**	83.0	83.0	950	1100	2.20	2.20
	602619	**MVSI 075/1750-S08**	60	•	150°C	1927	1927	**1214**	**1747**	**11.9**	**17.1**	93.0	93.0	1100	1300	2.60	2.60
	602891	**MVSI 075/2110-S02**	70	•	135°C	2326	2326	**1463**	**2107**	**14.4**	**20.7**	130	130	1500	1790	4.10	4.20
	602884	**MVSI 075/3110-S02**	80	•	135°C	3422	3422	**2152**	**3099**	**21.1**	**30.4**	188	188	2000	2300	5.40	5.20
	602515	**MVSI 075/3800-S02**	80	•	135°C	4206	4206	**2645**	**3808**	**25.9**	**37.4**	204	204	2500	3000	6.00	6.00
	602862	**MVSI 075/4200-S02**	90	•	135°C	4658	4658	**2930**	**4218**	**28.7**	**41.4**	228	228	2800	3350	6.50	6.50
	602826	**MVSI 075/5300-S02**	90	•	135°C	5838	5838	**3672**	**5287**	**36.0**	**51.9**	258	258	4000	4300	8.20	7.85
	602827	**MVSI 075/6500-S90**	95	□	135°C	7197	7197	**4526**	**6517**	**44.4**	**63.9**	315	315	4900	5800	9.90	9.50
	602551	**MVSI 075/6800-S02**	97	□	135°C	7340	7340	**4616**	**6647**	**45.3**	**65.2**	330	330	5600	6000	10.5	10.0
	602870	**MVSI 075/10000-S02**	97	□	135°C	12390	10973	**7792**	**9937**	**76.4**	**97.5**	438	419	6800	7450	13.2	12.0
	602863	**MVSI 075/12000-S90**	100	□	135°C	13816	12407	**8689**	**11235**	**85.2**	**110**	540	520	7600	8300	14.0	13.5
	602871	**MVSI 075/14000-S02**	105	□	135°C	17946	15500	**11285**	**14036**	**111**	**138**	702	680	9200	9600	21.0	19.5
	602872	**MVSI 075/17000-S02**	105	□	135°C	21337	19064	**13418**	**17263**	**132**	**169**	755	711	10400	11140	22.0	20.0
	602873	**MVSI 075/22000-S90**	110	□	135°C	28633	24508	**18005**	**22192**	**177**	**218**	1015	981	12500	16200	26.5	28.0
	602535	**MVSI 075/26000-S90**	110	□	135°C	-	28633	**-**	**25927**	**-**	**254**	-	1015	-	16200	-	28.0
	602589	**MVSI 075/30000-S02**	120	-	-	33440	33440	**21070**	**30430**	**207**	**299**	1125	1160	-	-	-	-

* Working moment = 2 x static moment. △ For special application. □ CSA certification on request, with feeding line included.

Fig. A

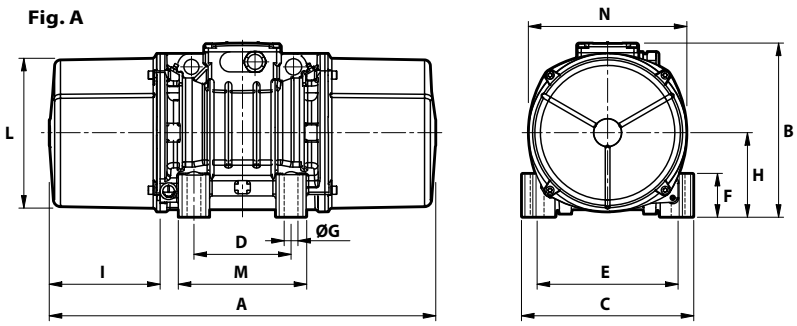

Fig. C

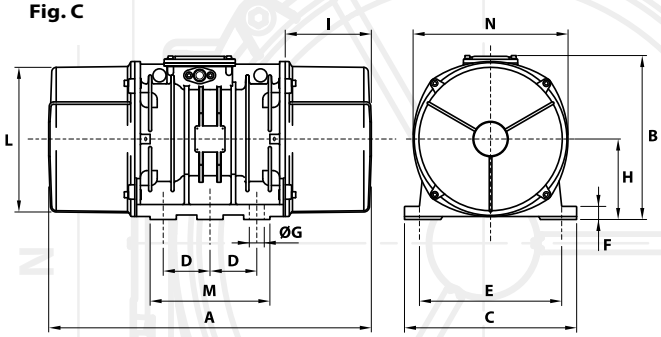

Dimensional specifications (mm)

I_A/I_N 50 Hz	I_A/I_N 60 Hz	Type	Fig.	A	B	C	Holes D	Holes E	Holes øG	Holes N°	F	H	I	L	M	N	Cable entry thread
2.13	2.11	**MVSI 075/150-S02**	**A**	344	203	167	**105**	**140**	**13**	**4**	30	82.5	93	145	140	160	M25x1,5
2.03	2.29	**MVSI 075/250-S02**	**A**	394	216	205	**120**	**170**	**17**	**4**	45	93.5	106	170	160	182	M25x1,5
2.22	2.94	**MVSI 075/260-S02**	**A**	372	225	205	**120**	**170**	**17**	**4**	54	104.5	86.0	187	162	203	M25x1,5
2.22	2.38	**MVSI 075/400-S02**	**A**	435	225	205	**120**	**170**	**17**	**4**	54	104.5	117.5	187	162	203	M25x1,5
2.22	2.38	**MVSI 075/530-S02**	**A**	480	225	205	**120**	**170**	**17**	**4**	54	104.5	140	187	162	203	M25x1,5
2.38	2.58	**MVSI 075/660-S08**	**A**	500	246	230	**140**	**190**	**17**	**4**	54	116	134	207	190	225	M25x1,5
2.38	2.85	**MVSI 075/910-S08**	**A**	574	246	230	**140**	**190**	**17**	**4**	54	116	171	207	190	225	M25x1,5
2.63	3.41	**MVSI 075/1310-S08**	**A**	617	272	275	**155**	**225**	**22**	**4**	70	130	177	238	210	253	M25x1,5
2.78	3.04	**MVSI 075/1750-S08**	**A**	663	272	275	**155**	**225**	**22**	**4**	70	130	200	238	210	253	M25x1,5
3.55	2.95	**MVSI 075/2110-S02**	**A**	666	321	310	**155**	**255**	**23.5**	**4**	77	157	178	277	215	295	M25x1,5
3.98	4.62	**MVSI 075/3110-S02**	**A**	734	347	340	**180**	**280**	**26**	**4**	80	165	202	303	240	320	M32x1,5
4.00	4.20	**MVSI 075/3800-S02**	**A**	796	347	340	**180**	**280**	**26**	**4**	80	165	233	303	240	320	M32x1,5
3.84	4.00	**MVSI 075/4200-S02**	**A**	744	370	390	**200**	**320**	**28**	**4**	90	180	192	330	270	350	M32x1,5
3.87	5.35	**MVSI 075/5300-S02**	**A**	840	370	390	**200**	**320**	**28**	**4**	90	180	240	330	270	350	M32x1,5
3.04	3.26	**MVSI 075/6500-S90** ▵	**A**	870	395	392	**200**	**320**	**28**	**4**	100	192	255	355	270	375	M32x1,5
3.12	3.30	**MVSI 075/6800-S02**	**C**	862	437	460	**125**	**380**	**39**	**6**	35	215	230	387	320	414	M32x1,5
3.33	3.92	**MVSI 075/10000-S02**	**C**	1002	437	460	**125**	**380**	**39**	**6**	35	215	300	387	320	414	M32x1,5
3.72	3.78	**MVSI 075/12000-S90**	**C**	1070	454	530	**140**	**440**	**45**	**6**	38	230	280	423	370	448	M32x1,5
4.99	5.44	**MVSI 075/14000-S90**	**F**	1040	526	570	**140**	**480**	**45**	**8**	41	268	240	486	510	516	M32x1,5
5.50	5.90	**MVSI 075/17000-S90**	**F**	1120	526	570	**140**	**480**	**45**	**8**	41	268	280	486	510	516	M32x1,5
5.63	4.71	**MVSI 075/22000-S90**	**F**	1150	607	610	**140**	**520**	**45**	**8**	38	297	297.5	542	510	582	M32x1,5
-	4.71	**MVSI 075/26000-S90**	**F**	1150	607	610	**140**	**520**	**45**	**8**	38	297	297.5	542	510	582	M32x1,5
-	-	**MVSI 075/30000-S02**	**Q**	1205	648	700	**140**	**600**	**45**	**8**	45	320	310	600	510	660	M32x1,5

I_A/I_N = ratio between start-up current and maximum current.

Several sizes are available with different mounting bolt patterns. Please contact sales office at Italvibras.

Fig. F

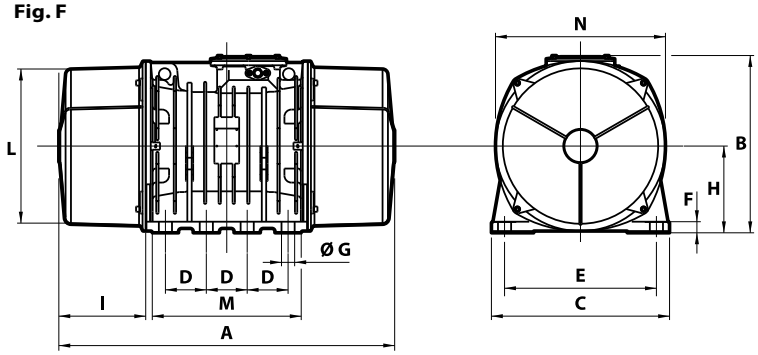

Fig. Q

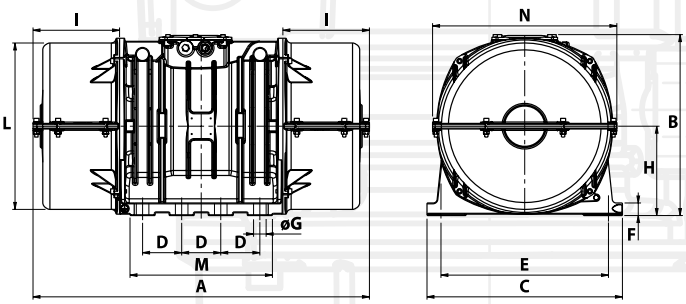

MVSI-TS

Split covers

The MVSI-TS series, obtained directly from the MVSI series, is characterized by the split weight covers. The weight cover is divided into two halves that can be removed in a radial direction. According to requirements it is possible to mount one or two split weight covers.
The MVSI-TS series is indispensable in those applications where the position of the vibrator in the vibrating machine makes it difficult to axially remove the weight cover, while it has space to carry this out in a radial direction.
The MVSI-TS series complies with the most recent IEC and EN international standards for use in atmospheres with potentially explosive powders.
In particular, the MVSI-TS series can be used in areas 21 and 22.

Technical features

Power supply
Three-phase voltage from 48V to 690V, 50Hz or 60Hz; suitable for use with an inverter from 20Hz to the base frequency, with constant torque load profile.

Polarity
4, 6 and 8 poles.

Conformity with European Directives
Low Voltage 2006/95/EC, ATEX 94/9/EC.

Reference Regulations
EN 60034-1,
IEC/EN 61241-0, IEC/EN 61241-1

Functioning
Continual service (S1) at maximum declared centrifugal force and electric power. Intermittent services are also possible depending on the type of vibrator and the operating conditions. For detailed information contact our technical assistance office.

Centrifugal force
Range extended up to 25000 Kgf. (245 KN), with centrifugal force adjustable from 0 to 100%.

Mechanical protection
IP 66 according to IEC 529, EN 60529.

Protection against mechanical impacts
IK 08 according to IEC 68, EN 50102.

Insulation class
Class F (155°C), class H (180°C) on request.

Tropicalization
Standard on all vibrators with “drop by drop” trickle system.

Ambient temperature
From -20°C to +40°C. Versions for higher or lower temperatures are available on request.

Vibrator thermal protection
Standard PTC rated thermistor heat detectors 130°C (DIN 44081-44082) from size 70, on request for smaller sizes. On request, thermistors with different temperatures and anti-condensation heaters.

Fixing of the vibrator
In all positions and therefore without restriction.

Lubrication
All vibrators are correctly lubricated in the factory and do not require further lubrication if used in normal operating conditions (”FOR LIFE” lubrication).
In heavy duty operating conditions periodical re-lubrication may be applied.

Terminal box
Large fixed electrical connections. Special shaped terminals allow to fix the power supply cable, protecting it from loosening.

Electric motor
Three-phase asynchronous type. Designed for maximum starting torques and torque curves specific to vibrating machines. Insulated windings using the “drop by drop” trickle system with class H resin. The rotor is die cast aluminium.

Casing
In spheroidal cast iron to have high strength and optimal elasticity. Patented shape that improves heat dispersion and lowers normal working temperature at full load.

Bearing flange
Constructed in cast iron (spheroidal or grey). The geometry of the flange transmits the load to the casing uniformly.

Bearings
Custom made with particular geometry, especially designed for Italvibras, suitable to support both high radial and axial loads.

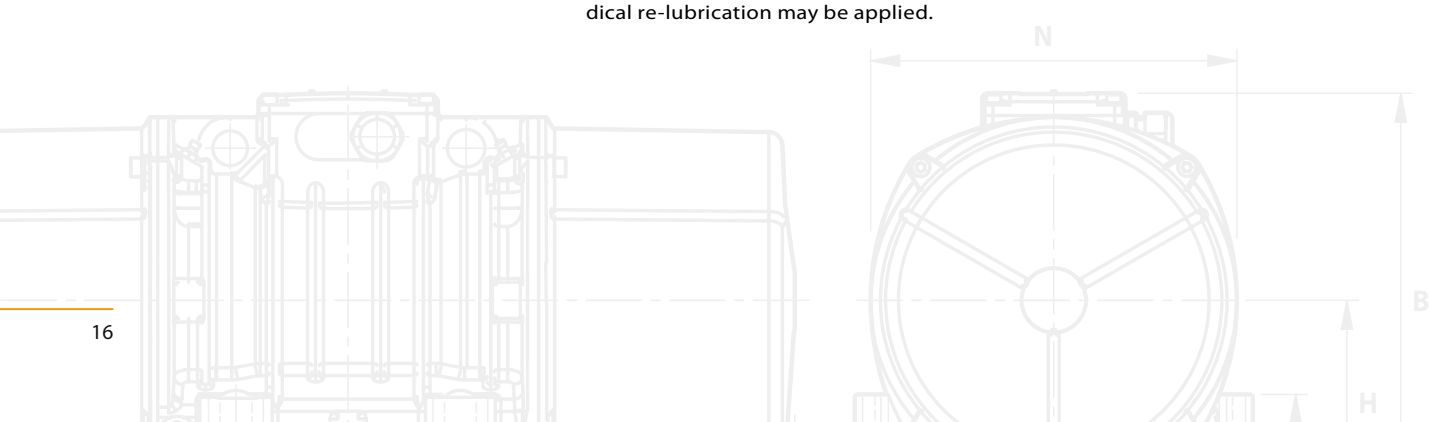

Category: II 2 D

Level of protection: tD A21 IP66

Temperature class: see tab. page 18-21

EC certificate: LCIE 05 ATEX 6163 X

Zones of use: 21, 22

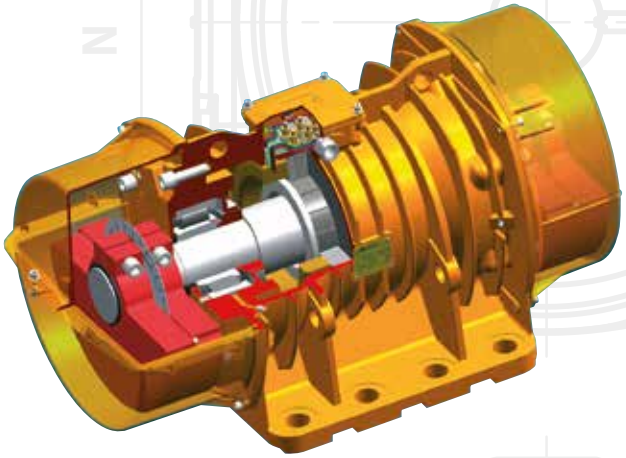

Motor shaft
In treated steel alloy (Isothermic hardening) resistant to stress.

Eccentric weights
Allow continual adjustment of the centrifugal force. This adjustment is realized by a graduated scale, which expresses the centrifugal force as a percentage of the maximum centrifugal force.
A patented system (patent N° MO98A000194), called ARS, prevents adjustment errors.

Weight covers
In aluminium alloy, dismountable to allow disassembly in a radial direction. On request vibrators can be supplied with 1 or 2 dismountable caps.

Painting
Electrostatic surface treatment based on polymerised epoxy polyester powder in oven at 200°C. Tested in salt spray for 500 hours.

Stainless steel protection
On request, corrosion high grade protection (stainless steel micro suspensions in a polyurethanic paint) is available.

Several sizes are available with different mounting bolt patterns. Please contact sales office at Italvibras.

Certifications

Regulation CAN/CSA - C22.2 N. 100-95, file n° LR100948 Class 4211 01 – Motors and generators.

Certificate of Conformity n° IECEx CES 09.0001X standards IEC 61241-0, IEC 61241-1

Mechanical protection IP66 (EN 60529), protection against impacts IK 08 (EN 50102)

Comply with the applicable European Union directives

II 2 D, tD A21 IP66
IEC/EN 61241-0, IEC/EN 61241-1
Certificate n. LCIE 05 ATEX 6163X

KOSHA Korea
Certificate n. 11-AVG BO-0359
Ex td A21 IP66

Certificate GOST-R n° IT.AB72.B03026 standards GOST R 51330.0-99, GOST R 51330.8-99, GOST R IEC 61241-1-1-99

Upon request available version MVSI-C Class I, Div. 2, Groups ABCD standards CAN/CSA-C22.2

MVSI-TS

4 poles - 1500/1800 rpm

	Description					Mechanical specifications								Electrical specifications					
	Code	Type	SIZE		II2D Temp. class	Static moment* kgmm		Centrifugal force kg		Centrifugal force kN		Weight kg		Max input power W		Max. current A 400 V	Max. current A 460 V
						50 Hz	60 Hz	50 Hz	60 Hz	50 Hz	60 Hz	50 Hz	60 Hz	50 Hz	60 Hz	50 Hz	60 Hz
three-phase	601219	**MVSI 15/1710-S02-TS**	50	•	150°C	715	485	**1798**	**1757**	**17.6**	**17.2**	52.0	49.5	1100	1200	2.00	1.90
	601267	**MVSI 15/2000-S02-TS**	50	•	170°C	817	561	**2054**	**2033**	**20.1**	**19.9**	56.5	52.5	1350	1450	2.50	2.30
	601220	**MVSI 15/2410-S08-TS**	60	•	150°C	962	674	**2420**	**2444**	**23.7**	**24.0**	73.0	68.0	1600	1700	3.20	3.00
	601268	**MVSI 15/3000-S08-TS**	60	•	135°C	1235	858	**3106**	**3107**	**30.5**	**30.5**	81.5	75.0	1900	2000	3.80	3.50
	601221	**MVSI 15/3810-S02-TS**	70	•	135°C	1526	1034	**3840**	**3744**	**37.7**	**36.7**	119	110	2200	2500	3.90	3.90
	601269	**MVSI 15/4300-S02-TS**	70	•	135°C	1720	1173	**4326**	**4250**	**42.4**	**41.7**	123	117	2500	2800	4.80	4.65
	601211	**MVSI 15/5010-S02-TS**	80	•	135°C	1990	1364	**5007**	**4941**	**49.1**	**48.5**	161	153	3600	3400	6.00	5.00
	601447	**MVSI 15/6000-S02-TS**	80	•	135°C	2248	1677	**5654**	**6075**	**55.5**	**59.6**	163.5	155	3600	3400	6.00	5.00
	601204	**MVSI 15/9500-S02-TS**	97	□	135°C	3346	2462	**8416**	**8916**	**82.6**	**87.5**	317	303	7500	8500	12.2	12.0

6 poles - 1000/1200 rpm

	Description					Mechanical specifications								Electrical specifications					
	Code	Type	SIZE		II2D Temp. class	Static moment* kgmm		Centrifugal force kg		Centrifugal force kN		Weight kg		Max input power W		Max. current A 400 V	Max. current A 460 V
						50 Hz	60 Hz	50 Hz	60 Hz	50 Hz	60 Hz	50 Hz	60 Hz	50 Hz	60 Hz	50 Hz	60 Hz
three-phase	602381	**MVSI 10/1110-S08-TS**	50	•	135°C	1012	715	**1132**	**1151**	**11.1**	**11.3**	59.0	52.0	750	750	1.65	1.50
	602382	**MVSI 10/1400-S08-TS**	50	•	170°C	1274	904	**1424**	**1483**	**14.0**	**14.5**	67.0	60.5	950	1000	1.80	1.70
	602406	**MVSI 10/1610-S08-TS**	60	•	135°C	1464	962	**1638**	**1549**	**16.1**	**15.2**	84.5	73.0	1100	1300	2.20	2.20
	602407	**MVSI 10/2100-S08-TS**	60	•	200°C	1927	1318	**2154**	**2102**	**21.1**	**20.6**	94.5	84.0	1500	1770	3.00	2.75
	602167	**MVSI 10/2610-S02-TS**	70	•	135°C	2326	1720	**2601**	**2747**	**25.5**	**26.9**	130	116	1960	2100	4.10	3.75
	602230	**MVSI 10/3000-S02-TS**	70	•	135°C	2690	1940	**3007**	**3124**	**29.5**	**30.6**	145	130	2200	2400	4.50	4.30
	602154	**MVSI 10/3810-S02-TS**	80	•	135°C	3422	2380	**3826**	**3831**	**37.5**	**37.6**	188	170	2500	3000	5.10	5.00
	602204	**MVSI 10/4700-S02-TS**	80	•	135°C	4206	2887	**4701**	**4648**	**46.1**	**46.0**	204	183	3200	3600	6.50	6.00
	602138	**MVSI 10/5200-S02-TS**	90	•	135°C	4658	3288	**5208**	**5293**	**51.1**	**51.9**	228	205	3800	4000	7.00	6.50
	602351	**MVSI 10/5700-S02-TS**	90	•	135°C	5044	3490	**5650**	**5620**	**55.4**	**55.1**	230	210	3800	4000	7.00	6.50
	602091	**MVSI 10/6500-S02-TS**	90	•	135°C	5838	4055	**6527**	**6529**	**64.0**	**64.0**	258	248	4300	5000	8.20	8.10
	602092	**MVSI 10/8000-S90-TS**	95	□	135°C	7197	4967	**8046**	**7996**	**78.9**	**78.4**	315	277	7000	7500	12.6	11.3
	602093	**MVSI 10/9000-S90-TS**	95	□	135°C	7752	5385	**8666**	**8669**	**85.0**	**85.0**	326	289	7500	8200	14.0	12.9
	602137	**MVSI 10/10000-S02-TS**	97	□	135°C	8673	5664	**9695**	**9117**	**95.1**	**89.4**	381	340	7600	8000	13.5	12.4
	602227	**MVSI 10/13000-S02-TS**	97	□	135°C	11510	8158	**12867**	**13130**	**126**	**129**	457	382	9600	10000	17.0	16.0
	602142	**MVSI 10/15000-S02-TS**	105	□	135°C	12662	8700	**14155**	**14004**	**139**	**137**	643	605	10600	11270	19.0	18.0
	602143	**MVSI 10/17500-S02-TS**	105	□	135°C	15500	10439	**17327**	**16804**	**170**	**165**	705	656	13000	19700	24.5	23.0
	602144	**MVSI 10/22000-S90-TS**	110	□	135°C	20025	12553	**22386**	**20208**	**220**	**198**	926	896	19000	19000	33.0	25.5
	602273	**MVSI 10/25000-S90-TS**	110	□	135°C	22364	14785	**25000**	**23800**	**245**	**233**	955	928	19000	19000	33.0	25.5

* Working moment = 2 x static moment. □ CSA certification on request, with feeding line included.

Fig. P

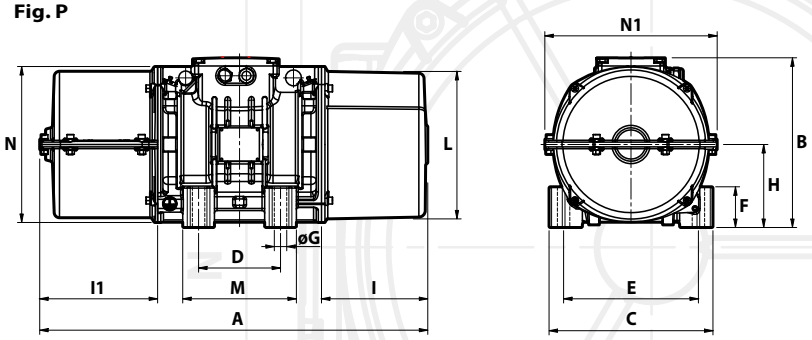

Dimensional specifications (mm)

I_A/I_N 50 Hz	I_A/I_N 60 Hz	Type	Fig.	A n. split covers 1	A n. split covers 2	B	C	Holes D	Holes E	Holes øG	Holes N°	F	H	I	L	M	N	l1	N1	Cable entry thread
4.29	4.89	**MVSI 15/1710-S02-TS**	**P**	558	616	246	230	**140**	**190**	**17**	**4**	54	116	134	210	190	225	192	258	M25x1,5
4.30	4.90	**MVSI 15/2000-S02-TS**	**P**	595	616	246	230	**140**	**190**	**17**	**4**	54	116	171	210	190	225	192	258	M25x1,5
6.09	7.23	**MVSI 15/2410-S08-TS**	**P**	685	707	272	275	**155**	**225**	**22**	**4**	70	130	137	238	210	253	222	287	M25x1,5
6.50	7.50	**MVSI 15/3000-S08-TS**	**P**	685	707	272	275	**155**	**225**	**22**	**4**	70	130	177	238	210	253	222	287	M25x1,5
7.11	6.92	**MVSI 15/3810-S02-TS**	**P**	624	664	321	310	**155**	**255**	**23.5**	**4**	77	157	137	277	215	295	177	326	M25x1,5
5.90	5.81	**MVSI 15/4300-S02-TS**	**P**	665 (50Hz) 624 (60Hz)	664	321	310	**155**	**255**	**23.5**	**4**	77	157	178 (50Hz) 137 (60Hz)	277	215	295	177	326	M25x1,5
7.02	8.00	**MVSI 15/5010-S02-TS**	**P**	656	682	347	340	**180**	**280**	**26**	**4**	80	165	150	303	240	320	176	356	M32x1,5
7.02	8.00	**MVSI 15/6000-S02-TS**	**P**	656	682	347	340	**180**	**280**	**26**	**4**	80	165	150	303	240	320	176	356	M32x1,5
6.56	6.67	**MVSI 15/9500-S02-TS**	**P**	878	894	437	460	**125**	**380**	**39**	**6**	35	215	230	387	320	414	246	450	M32x1,5

Dimensional specifications (mm)

I_A/I_N 50 Hz	I_A/I_N 60 Hz	Type	Fig.	A n. split covers 1	A n. split covers 2	B	C	Holes D	Holes E	Holes øG	Holes N°	F	H	I	L	M	N	l1	N1	Cable entry thread
3.33	4.13	**MVSI 10/1110-S08-TS**	**P**	595 (50Hz) 558 (60Hz)	616	246	230	**140**	**190**	**17**	**4**	54	116	168 (50Hz) 134 (60Hz)	210	190	225	192	258	M25x1,5
3.05	3.65	**MVSI 10/1400-S08-TS**	**P**	592	616	246	230	**140**	**190**	**17**	**4**	54	116	168	210	190	225	192	258	M25x1,5
4.21	4.05	**MVSI 10/1610-S08-TS**	**P**	685	707	272	275	**155**	**225**	**22**	**4**	70	130	177 (50Hz) 137 (60Hz)	238	210	253	222	287	M25x1,5
3.42	4.00	**MVSI 10/2100-S08-TS**	**P**	685	707	272	275	**155**	**225**	**22**	**4**	70	130	200 (50Hz) 177 (60Hz)	238	210	253	222	287	M25x1,5
5.35	5.60	**MVSI 10/2610-S02-TS**	**P**	711	756	321	310	**155**	**255**	**23.5**	**4**	77	157	178	277	215	295	223	326	M25x1,5
4.35	4.81	**MVSI 10/3000-S02-TS**	**P**	731	756	321	310	**155**	**255**	**23.5**	**4**	77	157	198	277	215	295	223	326	M25x1,5
5.91	6.00	**MVSI 10/3810-S02-TS**	**P**	758	782	347	340	**180**	**280**	**26**	**4**	80	165	202	303	240	320	226	356	M32x1,5
5.24	5.50	**MVSI 10/4700-S02-TS**	**P**	822	848	347	340	**180**	**280**	**26**	**4**	80	165	233	303	240	320	259	356	M32x1,5
4.71	5.08	**MVSI 10/5200-S02-TS**	**P**	818	892	370	390	**200**	**320**	**28**	**4**	90	180	192	330	270	350	266	382	M32x1,5
4.71	5.08	**MVSI 10/5700-S02-TS**	**P**	866	892	370	390	**200**	**320**	**28**	**4**	90	180	240	330	270	350	266	382	M32x1,5
4.51	5.83	**MVSI 10/6500-S02-TS**	**P**	866	892	370	390	**200**	**320**	**28**	**4**	90	180	240	330	270	350	266	382	M32x1,5
4.59	5.58	**MVSI 10/8000-S90-TS**	**P**	896	922	395	392	**200**	**320**	**28**	**4**	100	192	255	355	270	375	281	410	M32x1,5
4.13	4.88	**MVSI 10/9000-S90-TS**	**P**	896	922	395	392	**200**	**320**	**28**	**4**	100	192	255	355	270	375	281	410	M32x1,5
4.72	4.92	**MVSI 10/10000-S02-TS**	**P**	878	894	437	460	**125**	**380**	**39**	**6**	35	215	230	387	320	414	266	450	M32x1,5
4.98	5.00	**MVSI 10/13000-S02-TS**	**P**	1017	1032	437	460	**125**	**380**	**39**	**6**	35	215	300	387	320	414	315	450	M32x1,5
5.88	5.78	**MVSI 10/15000-S02-TS**	**P**	1030	1100	526	570	**140**	**480**	**45**	**8**	41	268	200	495	510	516	270	566	M32x1,5
5.71	5.96	**MVSI 10/17500-S02-TS**	**P**	1070	1100	526	570	**140**	**480**	**45**	**8**	41	268	240	495	510	516	270	566	M32x1,5
4.67	5.88	**MVSI 10/22000-S90-TS**	**P**	1175	1200	607	610	**140**	**520**	**45**	**8**	38	297	298	542	510	582	323	616	M32x1,5
4.67	5.88	**MVSI 10/25000-S90-TS**	**P**	1175	1200	607	610	**140**	**520**	**45**	**8**	38	297	298	542	510	582	323	616	M32x1,5

I_A/I_N = ratio between start-up current and maximum current.

Several sizes are available with different mounting bolt patterns. Please contact sales office at Italvibras.

MVSI-TS

8 poles - 750/900 rpm

	Description					Mechanical specifications								Electrical specifications			
	Code	Type	SIZE		II2D Temp. class	Static moment* kgmm		Centrifugal force kg		Centrifugal force kN		Weight kg		Max input power W		Max. current A 400 V	Max. current A 460 V
						50 Hz	60 Hz	50 Hz	60 Hz	50 Hz	60 Hz	50 Hz	60 Hz	50 Hz	60 Hz	50 Hz	60 Hz
three-phase	602610	**MVSI 075/910-S08-TS**	50	•	120°C	1012	1012	**637**	**917**	**6.25**	**9.00**	59.0	59.0	400	500	1.40	1.30
	602618	**MVSI 075/1310-S08-TS**	60	•	150°C	1464	1464	**922**	**1327**	**9.04**	**13.0**	84.5	84.5	950	1100	2.20	2.20
	602619	**MVSI 075/1750-S08-TS**	60	•	150°C	1927	1927	**1214**	**1747**	**11.9**	**17.1**	94.5	94.5	1100	1300	2.60	2.60
	602891	**MVSI 075/2110-S02-TS**	70	•	135°C	2326	2326	**1463**	**2107**	**14.4**	**20.7**	130	130	1500	1790	4.10	4.20
	602884	**MVSI 075/3110-S02-TS**	80	•	135°C	3422	3422	**2152**	**3099**	**21.1**	**30.4**	188	188	2000	2300	5.40	5.20
	602515	**MVSI 075/3800-S02-TS**	80	•	135°C	4206	4206	**2645**	**3808**	**25.9**	**37.4**	204	204	2500	3000	6.00	6.00
	602862	**MVSI 075/4200-S02-TS**	90	•	135°C	4658	4658	**2930**	**4218**	**28.7**	**41.4**	228	228	2800	3350	6.50	6.50
	602826	**MVSI 075/5300-S02-TS**	90	•	135°C	5838	5838	**3672**	**5287**	**36.0**	**51.9**	258	258	4000	4300	8.20	7.85
	602827	**MVSI 075/6500-S90-TS**	95	□	135°C	7197	7197	**4526**	**6517**	**44.4**	**63.9**	315	315	4900	5800	9.90	9.50
	602551	**MVSI 075/6800-S02-TS**	97	□	135°C	7340	7340	**4616**	**6647**	**45.3**	**65.2**	330	330	5600	6000	10.5	10.0
	602870	**MVSI 075/10000-S02-TS**	97	□	135°C	12390	10973	**7792**	**9937**	**76.4**	**97.5**	438	419	6800	7450	13.2	12.0
	602871	**MVSI 075/14000-S02-TS**	105	□	135°C	17946	15500	**11285**	**14036**	**111**	**138**	702	680	9200	9600	21.0	19.5
	602872	**MVSI 075/17000-S02-TS**	105	□	135°C	21337	19064	**13418**	**17263**	**132**	**169**	755	711	10400	11140	22.0	20.0
	602873	**MVSI 075/22000-S90-TS**	110	□	135°C	28633	24508	**18005**	**22192**	**177**	**218**	1015	981	12500	16200	26.5	28.0

* Working moment = 2 x static moment. □ CSA certification on request, with feeding line included.

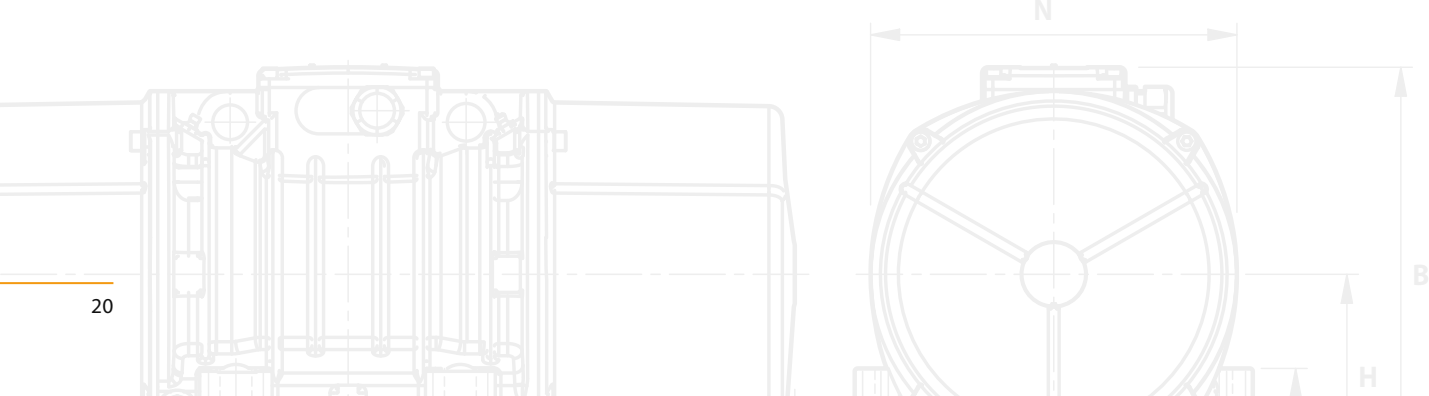

Fig. P

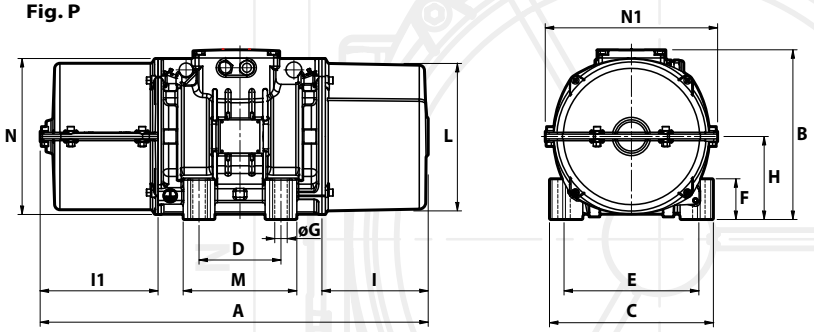

Dimensional specifications (mm)

I_A/I_N 50 Hz	I_A/I_N 60 Hz	Type	Fig.	A n. split covers 1	A n. split covers 2	B	C	Holes D	Holes E	Holes øG	Holes N°	F	H	I	L	M	N	I1	N1	Cable entry thread
2.38	2.85	**MVSI 075/910-S08-TS**	**P**	592	616	246	230	**140**	**190**	**17**	**4**	54	116	168	210	190	225	192	258	M25x1,5
2.63	3.41	**MVSI 075/1310-S08-TS**	**P**	685	707	272	275	**155**	**225**	**22**	**4**	70	130	177	238	210	253	222	287	M25x1,5
2.78	3.04	**MVSI 075/1750-S08-TS**	**P**	685	707	272	275	**155**	**225**	**22**	**4**	70	130	200	238	210	253	222	287	M25x1,5
3.55	2.95	**MVSI 075/2110-S02-TS**	**P**	711	756	321	310	**155**	**255**	**23.5**	**4**	77	157	178	277	215	295	223	326	M25x1,5
3.98	4.62	**MVSI 075/3110-S02-TS**	**P**	758	782	347	340	**180**	**280**	**26**	**4**	80	165	202	303	240	320	226	356	M32x1,5
4.00	4.20	**MVSI 075/3800-S02-TS**	**P**	822	848	347	340	**180**	**280**	**26**	**4**	80	165	233	303	240	320	259	356	M32x1,5
3.84	4.00	**MVSI 075/4200-S02-TS**	**P**	818	892	370	390	**200**	**320**	**28**	**4**	90	180	192	330	270	350	266	382	M32x1,5
3.87	5.35	**MVSI 075/5300-S02-TS**	**P**	866	892	370	390	**200**	**320**	**28**	**4**	90	180	240	330	270	350	266	382	M32x1,5
3.04	3.26	**MVSI 075/6500-S90-TS**	**P**	896	922	395	392	**200**	**320**	**28**	**4**	100	192	255	355	270	375	281	410	M32x1,5
3.12	3.30	**MVSI 075/6800-S02-TS**	**P**	878	894	437	460	**125**	**380**	**39**	**6**	35	215	230	387	320	414	246	450	M32x1,5
3.33	3.92	**MVSI 075/10000-S02-TS**	**P**	1017	1032	437	460	**125**	**380**	**39**	**6**	35	215	300	387	320	414	315	450	M32x1,5
4.99	5.44	**MVSI 075/14000-S02-TS**	**P**	1070	1100	526	570	**140**	**480**	**45**	**8**	41	268	240	485	510	516	270	566	M32x1,5
5.50	5.90	**MVSI 075/17000-S02-TS**	**P**	1150	1180	526	570	**140**	**480**	**45**	**8**	41	268	280	485	510	516	310	566	M32x1,5
5.63	4.71	**MVSI 075/22000-S90-TS**	**P**	1175	1200	607	610	**140**	**520**	**45**	**8**	38	297	298	542	510	582	323	616	M32x1,5

I_A/I_N = ratio between start-up current and maximum current.

Several sizes are available with different mounting bolt patterns. Please contact sales office at Italvibras.

MVSI-ACC

Shaft extension type

The MVSI-ACC series, deriving directly from the MVSI series, is characterised by the motor shaft projecting from one side, allowing in-line coupling, using a coupling, between two equal vibrators. The MVSI-ACC series is very useful for manufacturers of large screens and vibrating machines, or for plants that require very high centrifugal force values. With two vibrators of the MVSI-ACC series coupled in line, it is possible to arrive at a centrifugal force of 50.000 Kgf (490kN). Italvibras technical staff can help the user in the choice of the coupling as well as in the application of the vibrators. Upon request, it is possible to supply the shaft extension on both sides of the vibrator, so to enable the connection of three or more vibrators.
The "ACC" design can be supplied on request on other motor sizes not listed in these pages.

Technical features

Power supply
Three-phase voltage from 230V to 690V, 50Hz or 60Hz; suitable for use with an inverter from 20Hz to the base frequency, with constant torque load profile.

Polarity
6 standard poles, other polarities on request.

Conformity with European Directives
Low voltage 2006/95/EC.

Reference Regulations
EN 60034-1.

Functioning
Continual service (S1) at maximum declared centrifugal force and electric power.

Centrifugal force
Range extended up to 50000 Kgf. (490 KN) for the couple of vibrators, with centrifugal force adjustable from 0 to 100%.

Mechanical protection
IP 55 according to IEC 529, EN 60529.

Protection against mechanical impacts
IK 08 according to IEC 68, EN 50102.

Insulation class
Class F (155°C), class H (180°C) on request.

Tropicalization
Standard on all vibrators, with vacuum encapsulation or with "drop by drop" trickle system.

Ambient temperature
From -20°C to +40°C. Versions for higher or lower temperatures are available on request.

Vibrator thermal protection
With PTC rated thermistor heat detectors 130°C (DIN 44081-44082).
On request, thermistors with different temperatures and anti-condensation heaters.

Fixing of the vibrator
In all positions and therefore without restriction. Linear coupling using dynamic joint between the two vibrators.

Lubrication
All vibrators are correctly lubricated in the factory and do not require further lubrication if used in normal operating conditions ("FOR LIFE, lubrication"). In heavy duty operating conditions periodical re-lubrication methods may be applied.

Terminal box
Large fixed electrical connections. Special shaped terminals allow to fix the power supply cable, protecting it from loosening.

Electric motor
Three-phase asynchronous type. Designed for maximum starting torques and torque curves specific to vibrating machines.
Insulated windings using "drop by drop" trickle system with class H resin. The rotor is die cast aluminium.

6 poles - 1000/1200 rpm

	Description				Mechanical specifications								Electrical specifications					
	Code	Type	SIZE		Static moment* kgmm		Centrifugal force kg		Centrifugal force kN		Weight kg		Max input power W		Max. current A 400 V	Max. current A 460 V	I_A/I_N	
					50 Hz	60 Hz	50 Hz	60 Hz	50 Hz	60 Hz	50 Hz	60 Hz	50 Hz	60 Hz	50 Hz	60 Hz	50 Hz	60 Hz
three-phase	602301	**MVSI 10/15000-S02-ACC**	105	□	12662	8700	**14155**	**14004**	**139**	**137**	649	611	10600	11270	19.0	18.0	5.88	5.78
	602300	**MVSI 10/17500-S02-ACC**	105	□	15500	10439	**17327**	**16804**	**170**	**165**	711	662	13000	19700	24.5	23.0	5.71	5.96
	602319	**MVSI 10/22000-S90-ACC**	110	□	20025	12553	**22386**	**20208**	**220**	**198**	933	903	19000	19000	33.0	25.5	4.67	5.88
	602313	**MVSI 10/25000-S90-ACC**	110	□	22364	14785	**25000**	**23800**	**245**	**233**	970	938	19000	19000	33.0	25.5	4.67	5.88

* Working moment = 2 x static moment. □ CSA certification on request, with feeding line included. I_A/I_N = ratio between start-up current and maximum current.

Certifications

Regulation CAN/CSA - C22.2 N. 100-95,
file n° LR100948 Class 4211 01
– Motors and generators.

Mechanical protection IP66 (EN 60529),
protection against impacts IK 08
(EN 50102)

Comply with the applicable
European Union directives

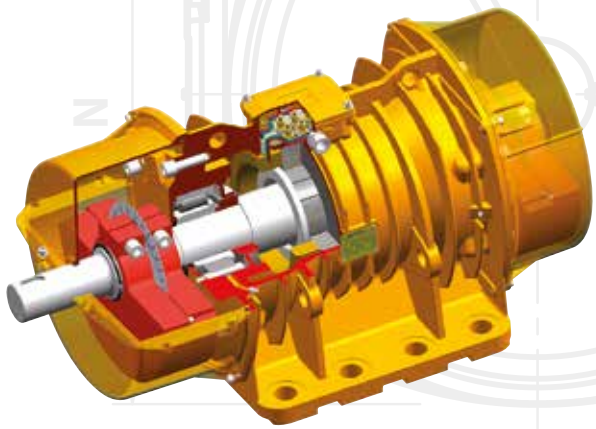

Casing
In spheroidal cast iron to guarantee sturdiness and elasticity. Patented shape that improves heat dispersion and lowers normal working temperature at full load.

Bearing flange
Constructed in spheroidal cast iron.
The geometry of the flange transmits the load to the casing uniformly.

Bearings
Custom made with particular geometry, especially designed for Italvibras, suitable to support both high radial and axial loads.

Motor shaft
In treated steel alloy (Isothermic hardening) resistant to stress. Projecting from one side to allow linear coupling using a joint.

Eccentric weights
Allow continual adjustment of the centrifugal force.
This adjustment is realized by a graduated scale, which expresses the centrifugal force as a percentage of the maximum centrifugal force. A patented system (patent N° MO98A000194), called ARS, prevents adjustment errors.

Weight covers
In aluminium alloy, from the shaft extension side the weight cover is sectioned: it is made up from two halves, which guarantee opening even after coupling between the two vibrators.

Painting
Electrostatic surface treatment based on polymerised epoxy polyester powder in oven at 200°C. Tested in salt spray for 500 hours.

Several sizes are available with different mounting bolt patterns. Please contact sales office at Italvibras.

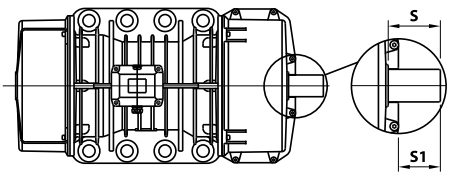

Fig. T

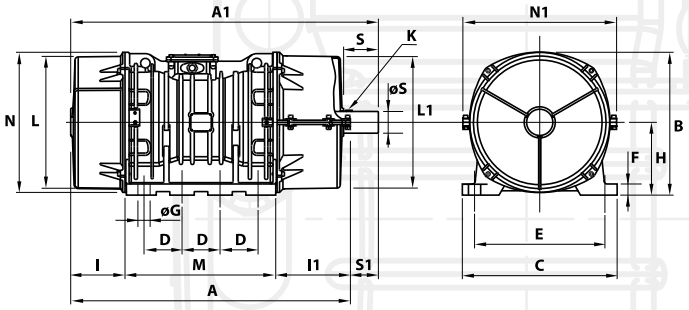

Dimensional specifications (mm)

Fig.	A	B	C	Holes D	Holes E	Holes øG	Holes N°	F	H	I	L	M	N	A1	L1	I1	N1	Shaft extension øS	Shaft extension S	Shaft extension S1	Shaft extension k key	Cable entry thread
T	1030	526	570	**140**	**480**	**45**	**8**	41	268	200	486	510	516	1133	490	270	566	80	128	103	22x14x50	M32x1,5
T	1070	526	570	**140**	**480**	**45**	**8**	41	268	240	486	510	516	1179	490	270	566	80	134	109	22x14x70	M32x1,5
T	1175	607	610	**140**	**520**	**45**	**8**	38	297	297.5	542	510	582	1234	546	322.5	616	105	90.5	59	28x16x70	M32x1,5
T	1175	607	610	**140**	**520**	**45**	**8**	38	297	297.5	542	510	582	1270	546	322.5	616	105	126.5	95	28x16x70	M32x1,5

Several sizes are available with different mounting bolt patterns. Please contact sales office at Italvibras.

MVSI-E

The MVSI-E series has been designed for use in industrial processes in environments with a potentially explosive atmosphere, due to the presence of explosive gas and dust, in compliance with ATEX Directive (94/9/CE).
In particular, the MVSI-E series can be used in areas 1 and 2 (gas) and in areas 21 and 22 (dusts) according to the layout and following features:

Technical features

Power supply
Three-phase voltage from 220V to 690V, 50Hz or 60Hz; suitable for use with an inverter from 20Hz to the base frequency with constant torque load profile tipo PWM.

Polarity
2, 4, 6 and 8 poles.

Conformity with European Directives
ATEX 94/9/EC; Low voltage 2006/95/EC.

Reference Regulations
IEC/EN 60079-0, IEC/EN 60079-7, IEC/EN 60079-31, EN 60034-1.

Controls
The components that affect protection are 100% accurately controlled and recorded.

Functioning
Continual service (S1) at maximum declared centrifugal force and electric power.

Centrifugal force
Range extended up to 11160 Kgf. (109 KN), adjustable in a continuous linear mode with variation of the position of the eccentric weights.

Mechanical protection
IP 66 according to IEC 529, EN 60529.

Protection against mechanical impacts
IK 08 according to IEC 68, EN 50102.

Insulation class
Class F (155°C).

Tropicalization
Standard on all vibrators, with vacuum encapsulation up to size AF 33 and 35, with "drop by drop" trickle system for larger sizes.

Ambient temperature
From -20°C to +40°C, on request it is possible to have vibrators for max. ambient temperatures of +55°C.

Vibrator thermal protection
Standard PTC rated thermistor heat detectors 130°C (DIN 44081-44082) from size 70, on request for smaller sizes. On request, thermistors with different temperatures and anti-condensation heaters.

Fixing of the vibrator
In all positions and therefore without restriction.

Lubrication
All vibrators are lubricated in the factory and do not require further lubrication if used in normal operating conditions ("FOR LIFE" lubrication). In heavy duty operating conditions periodical re-lubrication may be applied to size 35 and larger.

Terminal box
Large fixed electrical connections. Special shaped terminals allow to fix the power supply cable, protecting it from loosening.

Electric motor
Three-phase asynchronous type. Designed for maximum starting torques and torque curves specific to requirements of vibrating machines. Insulated windings using vacuum encapsulating up to size 35; using the "drop by drop" trickle system with class H resin for larger sizes.
The rotor is die cast aluminium.

Casing
In high-tensile aluminium alloy up to size 60, in spheroidal cast iron for larger sizes. Patented shape that improves heat dispersion and lowers normal working temperature at full load. An external earthing screw is located on the casing as prescribed by Regulation IEC/EN 60079-0.

Bearing flange
Constructed in cast iron (spheroidal or grey) or in aluminium with steel bearing seat. The geometry of the flange transmits the load to the casing uniformly.

Bearings
Custom made with particular geometry, especially designed for Italvibras, suitable to support both high radial and axial loads.

Category: II 2 GD

Level of protection: Ex e IIC T3/T4 Gb, Ex tb IIIC T...°C Db

Temperature class: Gas: T3 (200°C) or T4 (135°C)
Dust: see tab. page 26-33

EC certificate: LCIE 06 ATEX 6092 X

Zones of use: 1, 2, 21, 22

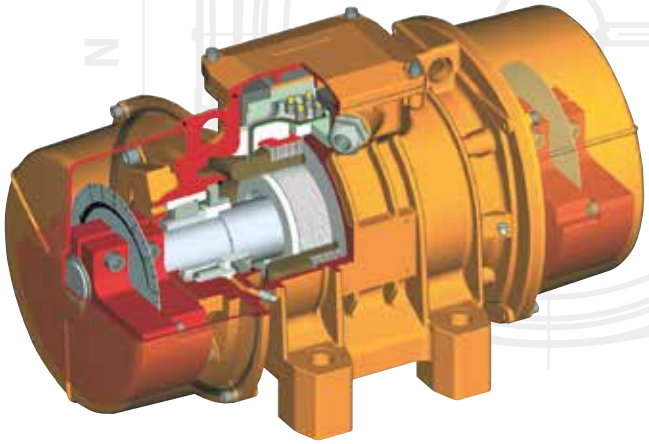

Motor shaft
In treated steel alloy (Isothermic hardening) resistant to stress.

Eccentric weights
Allow continual adjustment of the centrifugal force. This adjustment is realized by a graduated scale, which expresses the centrifugal force as a percentage of the maximum centrifugal force.
A patented system (patent N°MO98A000194), called ARS, prevents adjustment errors.

Weight covers
In aluminium alloy.

Painting
Electrostatic surface treatment based on polymerised epoxy polyester powder in oven at 200°C. Tested in salt spray for 500 hours.

Stainless steel protection
On request, corrosion high grade protection (stainless steel AISI 316L micro suspensions in a polyurethanic paint) is available.

Several sizes are available with different mounting bolt patterns. Please contact sales office at Italvibras.

Certifications

II 2 GD - Class Ex e IIC T3/T4 Gb,
Ex tb IIIC T...°C Db
IEC/EN 60079-0, IEC/EN 60079-7,
IEC/EN 60079-31,
Certificate n° LCIE 06 ATEX 6092 X

Comply with the applicable European Union directives
Low voltage (2006/95/EC)
ATEX (94/9/EC).

GGTN Permit and Gost-R certificate:
Ex e II T3/T4 - DIP A21 IP66
GOST R 51330.0-99,
GOST R 51330.8-99, GOST R IEC 61241-1-1-99.

KOSHA Korea
Certificate n° 11-AV4 BO-0346/7/8/9/50/51
Ex e II T3/T4 - Ex td A21 IP66

Certificate of Conformity
n° IECEx LCI 10.0003X
standards IEC 60079-0, IEC 60079-7,
IEC 60079-31

MVSI-E

2 poles - 3000/3600 rpm

	Description			Mechanical specifications								Electrical specifications					
				Static moment* kgmm		Centrifugal force kg		Centrifugal force kN		Weight kg		Temp. class (G)	Temp. class (D)	Max input power W		Power rating W	
	Code	Type	SIZE	50 Hz	60 Hz	50 Hz	60 Hz	50 Hz	60 Hz	50 Hz	60 Hz			50 Hz	60 Hz	50 Hz	60 Hz
three-phase	6E0311	**MVSI 3/100E-S02 ▲**	00	12.0	12.0	**121**	**174**	**1.19**	**1.71**	5.60	5.60	T3 T4	120°C	180 105	180 105	120 80	120 80
	6E0312	**MVSI 3/200E-S02 ▲**	01	21.0	15.0	**211**	**218**	**2.07**	**2.14**	6.40	6.20	T3	120°C	180	180	120	120
	6E0313	**MVSI 3/300E-S02**	10	30.1	20.4	**304**	**297**	**2.98**	**2.91**	9.70	9.20	T3 T4	120°C	260 230	270 230	210 172	210 172
	6E0314	**MVSI 3/500E-S02**	20	49.9	32.4	**503**	**471**	**4.93**	**4.62**	14.8	13.8	T3 T4	120°C	500 350	500 360	300 210	300 210
	6E0381	**MVSI 3/800E-S02**	30	78.0	52.0	**785**	**754**	**7.70**	**7.40**	21.0	20.0	T3 T4	120°C	550 390	570 400	405 290	405 290
	6E0513	**MVSI 3/1100E-S02**	35	110	73.0	**1105**	**1061**	**10.8**	**10.4**	23.0	22.0	T3 T4	120°C	550 460	600 500	350 290	350 290
	6E0491	**MVSI 3/1300E-S08**	AF33	128	91.6	**1290**	**1327**	**12.7**	**13.0**	27.0	24.7	T4	200°C	700	750	500	500
	6E0504	**MVSI 3/1500E-S08**	AF33	146	110	**1470**	**1595**	**14.4**	**15.6**	25.3	24.0	T4	200°C	700	750	500	500
	6E0502	**MVSI 3/1600E-S02**	50	153	102	**1545**	**1483**	**15.2**	**14.5**	33.0	31.5	T3 T4	200°C	1010 830	1070 910	720 660	720 660
	6E0503	**MVSI 3/1800E-S02**	50	179	128	**1802**	**1853**	**17.7**	**18.2**	34.0	32.5	T3	200°C	1010	1070	720	720
	6E0256	**MVSI 3/2010E-S90**	AF50	205	128	**2059**	**1853**	**20.2**	**18.2**	48.7	46.3	T3	200°C	1110	1150	960	960
	6E0257	**MVSI 3/2310E-S90**	AF50	230	153	**2316**	**2224**	**22.7**	**21.8**	49.6	47.1	T3	200°C	1110	1150	960	960
	6E0472	**MVSI 3/5000E-S02**	AF70	515	344	**5187**	**4979**	**50.9**	**48.8**	109	105	T3	135°C	3000	3000	2600	2600

* Working moment = 2 x static moment. ▲ Available only in versions 127/220V 50Hz three-phase, 200/346V 50Hz three-phase and 210/363V 60Hz three-phase.

Fig. A

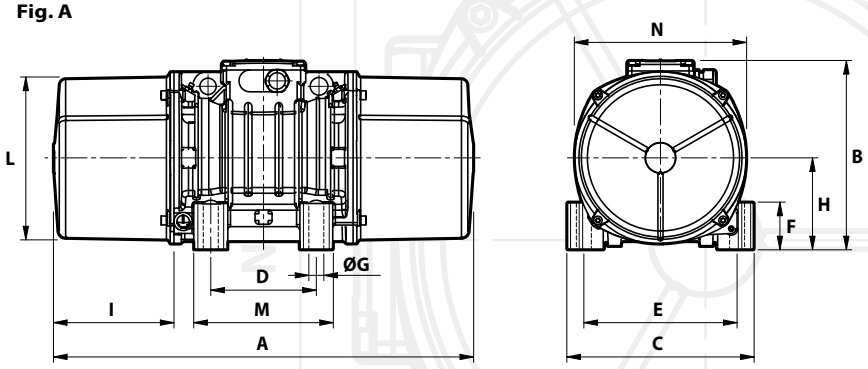

Max. current A 400 V 50 Hz	Max. current A 460 V 60 Hz	t_E (s)	I_A/I_N	Type	Fig.	A	B	C	D	E	øG	N°	F	H	I	L	M	N	Cable entry thread
						Dimensional specifications (mm)					Holes								
0.33 0.26	0.30 0.23	30 20	2.68 3.48	**MVSI 3/100E-S02** ▲	**A**	211	153	125	**62-74****	**106**	**9**	**4**	24	61	46	103	100	117	M20x1,5
0.33	0.30	30	2.68	**MVSI 3/200E-S02** ▲	**A**	235	153	125	**62-74****	**106**	**9**	**4**	24	61	58	103	100	117	M20x1,5
0.57 0.48	0.50 0.41	18 12	3.50 4.20	**MVSI 3/300E-S02**	**A**	255	179	152	**90**	**125**	**13**	**4**	28	73	54	127	128	141	M20x1,5
0.76 0.57	0.67 0.50	12 8	4.20 5.60	**MVSI 3/500E-S02**	**A**	288	203	167	**105**	**140**	**13**	**4**	30	82.5	65	145	140	160	M25x1,5
0.95 0.72	0.83 0.64	12 8	4.20 5.52	**MVSI 3/800E-S02**	**A**	308	216	205	**120**	**170**	**17**	**4**	45	93.5	63	170	160	182	M25x1,5
0.86 0.76	0.75 0.67	15 11	3.88 4.37	**MVSI 3/1100E-S02**	**A**	435	225	205	**120**	**170**	**17**	**4**	54	104.5	117.5	187	162	203	M25x1,5
1.24	1.07	6	6.40	**MVSI 3/1300E-S08**	**A**	375	216.5	215	**100**	**180**	**17**	**4**	47	93.5	106	170	145	182	M25x1,5
1.24	1.07	6	6.40	**MVSI 3/1500E-S08**	**A**	375	216.5	215	**100**	**180**	**17**	**4**	47	93.5	106	170	145	182	M25x1,5
1.62 1.43	1.40 1.25	6 6	9.29 7.30	**MVSI 3/1600E-S02**	**A**	430	246	230	**140**	**190**	**17**	**4**	54	116	99	207	190	225	M25x1,5
1.62	1.40	6	9.29	**MVSI 3/1800E-S02**	**A**	430	246	230	**140**	**190**	**17**	**4**	54	116	99	207	190	225	M25x1,5
1.90	1.66	7	5.90	**MVSI 3/2010E-S90**	**A**	465	230	230	**140**	**190**	**17**	**4**	49	104	105	186	180	200	M25x1,5
1.90	1.66	7	5.90	**MVSI 3/2310E-S90**	**A**	465	230	230	**140**	**190**	**17**	**4**	49	104	105	186	180	200	M25x1,5
4.75	4.20	5	8.00	**MVSI 3/5000E-S02**	**A**	560	290	310	**155**	**255**	**25**	**4**	90	130	137	238	210	253	M25x1,5

t_E (s) = set time t_E from IEC/EN 60079-7. I_A/I_N = ratio between start-up current and maximum current. ** Slot.

Several sizes are available with different mounting bolt patterns. Please contact sales office at Italvibras.

MVSI-E

4 poles - 1500/1800 rpm

	Description			Mechanical specifications								Electrical specifications					
				Static moment* kgmm		Centrifugal force kg		Centrifugal force kN		Weight kg		Temp. class (G)	Temp. class (D)	Max input power W		Power rating W	
	Code	Type	SIZE	50 Hz	60 Hz	50 Hz	60 Hz	50 Hz	60 Hz	50 Hz	60 Hz			50 Hz	60 Hz	50 Hz	60 Hz
three-phase	6E1367	**MVSI 15/200E-S02**	10	84.2	58.8	**213**	**214**	**2.09**	**2.10**	12.5	11.7	T4	120°C	203	175	90	95
	6E1372	**MVSI 15/400E-S02**	20	163	113	**412**	**411**	**4.04**	**4.03**	19.0	18.2	T3 T4	120°C	300 285	320 270	200 180	230 200
	6E1373	**MVSI 15/550E-S02**	20	219	163	**552**	**592**	**5.42**	**5.81**	20.4	19.0	T3 T4	120°C	300 285	320 270	200 180	230 200
	6E1408	**MVSI 15/700E-S02**	30	286	209	**720**	**760**	**7.06**	**7.46**	27.5	26.2	T3 T4	120°C	460 360	500 420	310 240	380 310
	6E1524	**MVSI 15/1100E-S02**	35	415	271	**1045**	**982**	**10.3**	**9.63**	35.0	30.5	T4	120°C	370	450	285	340
	6E1217	**MVSI 15/1410E-S02**	40	561	400	**1413**	**1449**	**13.9**	**14.2**	44.0	41.0	T3 T4	120°C	900 630	950 700	660 460	730 505
	6E1219	**MVSI 15/1710E-S02**	50	715	485	**1798**	**1757**	**17.6**	**17.2**	51.0	48.5	T3 T4	150°C	1100 630	1150 700	730 480	800 530
	6E1267	**MVSI 15/2000E-S02**	50	817	561	**2054**	**2033**	**20.1**	**19.9**	55.5	51.5	T3 T4	150°C	1100 630	1150 700	730 480	800 530
	6E1220	**MVSI 15/2410E-S08**	60	962	674	**2420**	**2444**	**23.7**	**24.0**	71.0	66.0	T3 T4	150°C	1600 1150	1700 1250	1340 880	1470 970
	6E1268	**MVSI 15/3000E-S08**	60	1235	858	**3106**	**3107**	**30.5**	**30.5**	80.0	73.5	T3 T4	135°C	1280 1150	1550 1400	1000 900	1200 1080
	6E1221	**MVSI 15/3810E-S02**	70	1526	1034	**3840**	**3744**	**37.7**	**36.7**	119	110	T3 T4	135°C	2200 1850	2400 1950	1780 1500	1960 1650
	6E1269	**MVSI 15/4300E-S02**	70	1720	1173	**4326**	**4250**	**42.4**	**41.7**	123	117	T3 T4	135°C	2200 1850	2400 1950	1780 1500	1960 1650
	6E1211	**MVSI 15/5010E-S02**	80	1990	1364	**5007**	**4911**	**49.1**	**48.5**	161	153	T3	135°C	3200	3700	2560	2800
	6E1447	**MVSI 15/6000E-S02**	80	2261	1560	**5690**	**5650**	**55.8**	**55.4**	163.5	155	T3	135°C	3200	3700	2560	2800
	6E1204	**MVSI 15/9500E-S02**	97	3346	2462	**8416**	**8916**	**82.6**	**87.5**	317	303	T3	135°C	7300	7900	5925	6500

* Working moment = 2 x static moment.

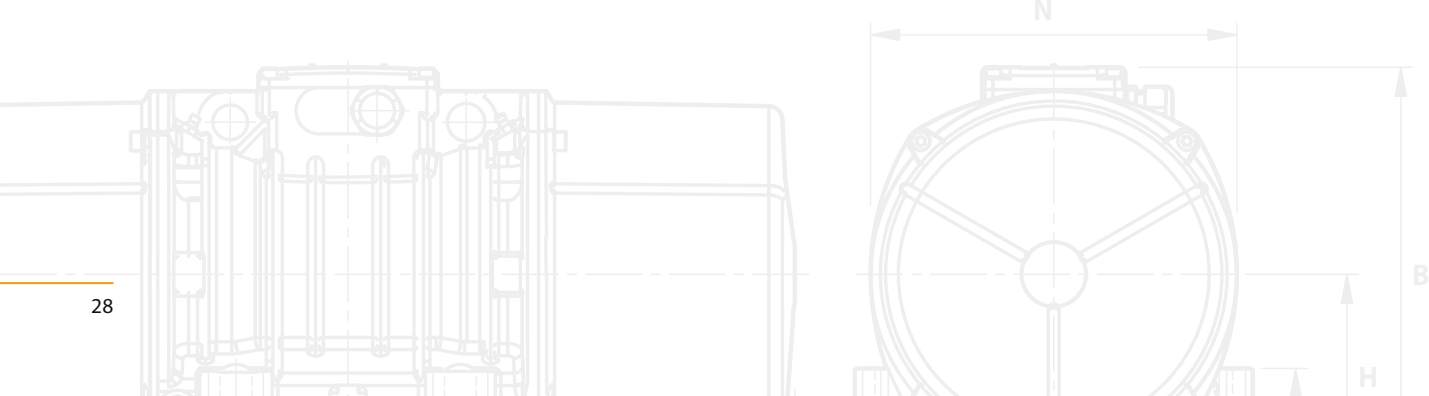

Fig. A

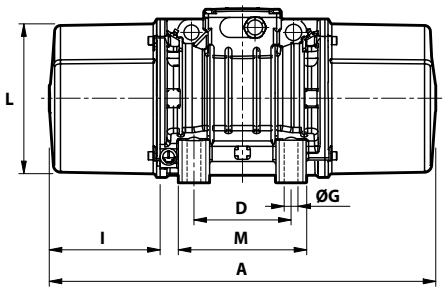

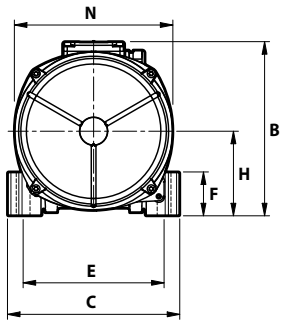

Fig. C

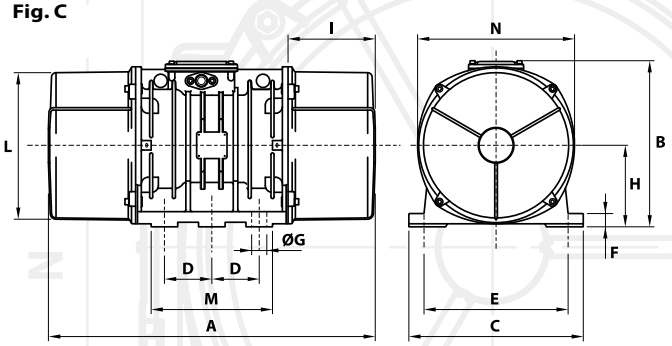

Dimensional specifications (mm)

Max. current A 400 V 50 Hz	Max. current A 460 V 60 Hz	t_E (s)	I_A/I_N	Type	Fig.	A	B	C	Holes D	Holes E	Holes øG	Holes N°	F	H	I	L	M	N	Cable entry thread
0.45	0.40	35 (50Hz) 28 (60Hz)	2.04 (50Hz) 2.34 (60Hz)	**MVSI 15/200E-S02**	**A**	301	179	152	**90**	**125**	**13**	**4**	28	73	77	127	128	141	M20x1,5
0.57 0.52	0.52 0.46	18 16	3.33 3.63	**MVSI 15/400E-S02**	**A**	344	203	167	**105**	**140**	**13**	**4**	30	82.5	93	145	140	160	M25x1,5
0.57 0.52	0.52 0.46	18 16	3.33 3.63	**MVSI 15/550E-S02**	**A**	386	203	167	**105**	**140**	**13**	**4**	30	82.5	114	145	140	160	M25x1,5
0.86 0.72	0.85 0.70	17 12	3.5 4.2	**MVSI 15/700E-S02**	**A**	394	216	205	**120**	**170**	**17**	**4**	45	93.5	106	170	160	182	M25x1,5
0.81	0.83	13	4	**MVSI 15/1100E-S02**	**A**	435	225	205	**120**	**170**	**17**	**4**	54	104.5	117.5	187	162	203	M25x1,5
1.38 1.05	1.32 1.00	13 8	4 5.36	**MVSI 15/1410E-S02**	**A**	448	246	230	**140**	**190**	**17**	**4**	54	116	108	207	190	225	M25x1,5
1.90 1.33	1.82 1.27	9 5.5	4.95 7	**MVSI 15/1710E-S02**	**A**	500	246	230	**140**	**190**	**17**	**4**	54	116	134	207	190	225	M25x1,5
1.90 1.33	1.82 1.27	9 5.5	4.95 7	**MVSI 15/2000E-S02**	**A**	574 (50Hz) 500 (60Hz)	246	230	**140**	**190**	**17**	**4**	54	116	171 (50Hz) 134 (60Hz)	207	190	225	M25x1,5
3.04 2.47	3.20 2.30	7 5.5	6 7.5	**MVSI 15/2410E-S08**	**A**	537	272	275	**155**	**225**	**22**	**4**	70	130	137	238	210	253	M25x1,5
3.14 2.85	3.10 2.85	5.5 5.5	7.42 8.16	**MVSI 15/3000E-S08**	**A**	617	272	275	**155**	**225**	**22**	**4**	70	130	177	238	210	253	M25x1,5
3.71 3.14	3.50 3.00	6 6	7.17 8.42	**MVSI 15/3810E-S02**	**A**	584	321	310	**155**	**255**	**23.5**	**4**	77	157	137	277	215	295	M25x1,5
3.71 3.14	3.50 3.00	6 6	7.17 8.42	**MVSI 15/4300E-S02**	**A**	666 (50Hz) 584 (60Hz)	321	310	**155**	**255**	**23.5**	**4**	77	157	178 (50Hz) 137 (60Hz)	277	215	295	M25x1,5
5.70	5.45	6	7	**MVSI 15/5010E-S02**	**A**	630	347	340	**180**	**280**	**26**	**4**	80	165	150	303	240	320	M32x1,5
5.70	4.45	6	7	**MVSI 15/6000E-S02**	**A**	680	370	390	**200**	**320**	**28**	**4**	90	180	160	330	270	350	M32x1,5
11.6	11.0	5.5	7	**MVSI 15/9500E-S02**	**C**	862	437	460	**125**	**380**	**39**	**6**	35	215	230	387	320	414	M32x1,5

t_E (s) = set time t_E from IEC/EN 60079-7. I_A/I_N = ratio between start-up current and maximum current.
Several sizes are available with different mounting bolt patterns. Please contact sales office at Italvibras.

MVSI-E

6 poles - 1000/1200 rpm

	Description			Mechanical specifications								Electrical specifications					
	Code	Type	SIZE	Static moment* kgmm		Centrifugal force kg		kN		Weight kg		Temp. class (G)	Temp. class (D)	Max input power W		Power rating W	
				50 Hz	60 Hz	50 Hz	60 Hz	50 Hz	60 Hz	50 Hz	60 Hz			50 Hz	60 Hz	50 Hz	60 Hz
three-phase	6E2298	**MVSI 10/200E-S02**	20	163	163	**183**	**264**	**1.80**	**2.59**	19.0	19.0	T4	120°C	185	200	100	110
	6E2314	**MVSI 10/310E-S02**	30	286	209	**321**	**338**	**3.15**	**3.32**	27.5	26.2	T4	120°C	320	350	201	221
	6E2402	**MVSI 10/550E-S02**	35	457	457	**512**	**737**	**5.02**	**7.23**	36.5	36.5	T4	120°C	350	380	240	264
	6E2380	**MVSI 10/810E-S08**	40	723	561	**809**	**905**	**7.94**	**8.88**	48.0	44.0	T3 T4	135°C	680 500	730 540	448 290	490 320
	6E2381	**MVSI 10/1110E-S08**	50	1012	715	**1132**	**1151**	**11.1**	**11.3**	58.0	51.0	T3 T4	135°C	750 480	690 500	550 300	550 300
	6E2382	**MVSI 10/1400E-S08**	50	1274	921	**1424**	**1483**	**14.0**	**14.5**	66.0	59.5	T3 T4	135°C	750 480	690 500	550 300	550 300
	6E2406	**MVSI 10/1610E-S08**	60	1464	962	**1638**	**1549**	**16.1**	**15.2**	83.0	71.0	T3 T4	135°C	1100 850	1200 950	825 615	900 675
	6E2407	**MVSI 10/2100E-S08**	60	1927	1318	**2154**	**2102**	**21.1**	**20.6**	93.0	82.0	T3 T4	155°C	1500 1050	1700 1200	940 750	1020 820
	6E2167	**MVSI 10/2610E-S02**	70	2326	1706	**2601**	**2747**	**25.5**	**26.9**	130	116	T3	135°C	1960	2100	1580	1700
	6E2230	**MVSI 10/3000E-S02**	70	2690	1940	**3007**	**3124**	**29.5**	**30.6**	145	130	T3 T4	135°C	2200 1770	2400 1900	1630 1350	1770 1470
	6E2154	**MVSI 10/3810E-S02**	80	3422	2380	**3826**	**3831**	**37.5**	**37.6**	188	170	T3 T4	135°C	2200 2000	2700 2200	1575 1500	1730 1650
	6E2204	**MVSI 10/4700E-S02**	80	4206	2887	**4701**	**4648**	**46.1**	**46.0**	204	183	T3 T4	135°C	3100 2550	3500 3000	2500 2100	2770 2290
	6E2350	**MVSI 10/5150E-S02**	80	4678	3230	**5230**	**5200**	**51.3**	**51.0**	225	200	T3 T4	135°C	3100 2550	3500 3000	2500 2100	2770 2290
	6E2138	**MVSI 10/5200E-S02**	90	4658	3288	**5208**	**5293**	**51.1**	**51.9**	228	205	T3	135°C	3500	3650	2590	2700
	6E2351	**MVSI 10/5700E-S02**	90	5044	3490	**5650**	**5620**	**55.4**	**55.1**	230	210	T3	135°C	3500	3650	2590	2700
	6E2136	**MVSI 10/6600E-S02**	97	6083	3979	**6799**	**6405**	**66.7**	**62.8**	285	257	T3	135°C	4200	4800	3360	3550
	6E2137	**MVSI 10/10000E-S02**	97	8673	5664	**9695**	**9117**	**95.1**	**89.4**	381	340	T3	135°C	5400	5900	4500	4800
	6E2349	**MVSI 10/11200E-S02**	97	9983	6896	**11160**	**11100**	**109**	**109**	405	370	T3	135°C	5400	5900	4500	4800

* Working moment = 2 x static moment.

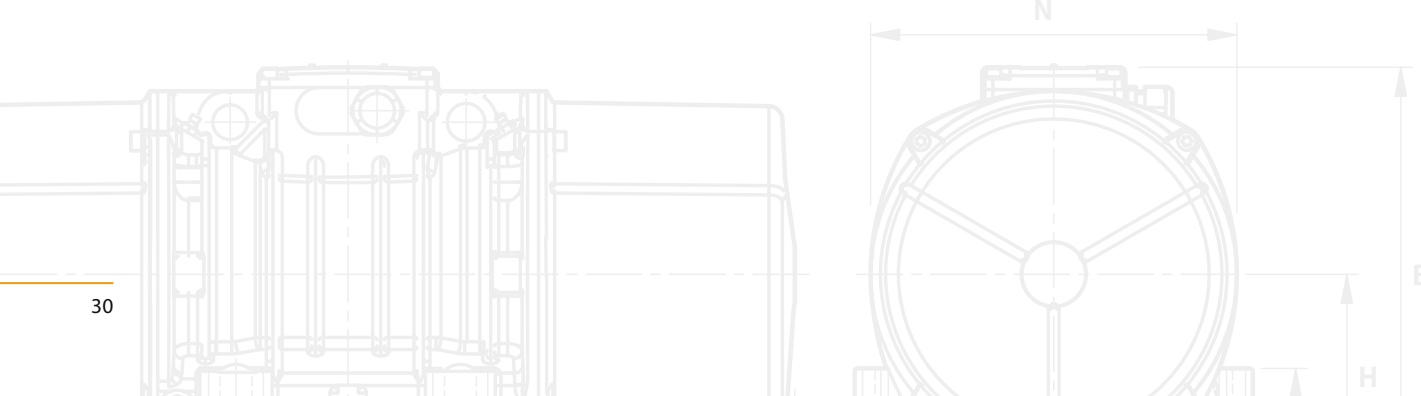

Fig. A

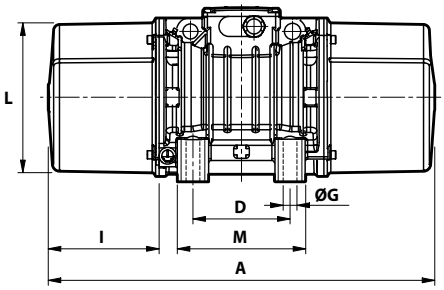

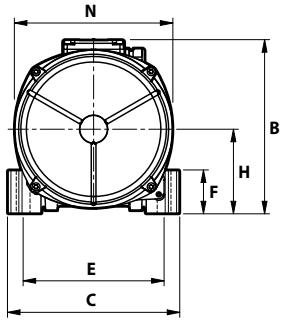

Fig. C

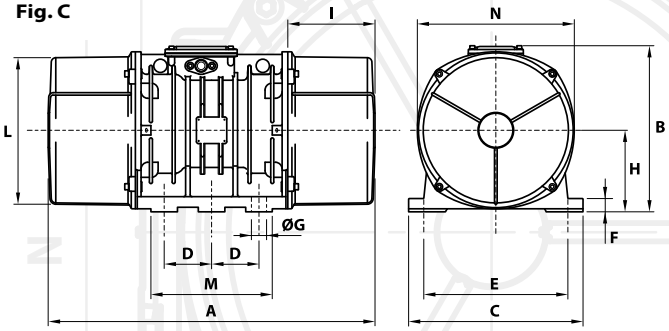

Dimensional specifications (mm)

Max. current A 400 V 50 Hz	Max. current A 460 V 60 Hz	t_E (s)	I_A/I_N	Type	Fig.	A	B	C	Holes D	Holes E	Holes øG	Holes N°	F	H	I	L	M	N	Cable entry thread
0.48	0.45	25	2.72	**MVSI 10/200E-S02**	**A**	344	203	167	**105**	**140**	**13**	**4**	30	82.5	93	145	140	160	M25x1,5
0.67	0.65	25	2.81	**MVSI 10/310E-S02**	**A**	394	216	205	**120**	**170**	**17**	**4**	45	93.5	106	170	160	182	M25x1,5
0.71	0.68	26	2.40	**MVSI 10/550E-S02**	**A**	435	225	205	**120**	**170**	**17**	**4**	54	104.5	117.5	187	162	203	M25x1,5
1.33 1.05	1.27 1.00	25 17	2.78 3.54	**MVSI 10/810E-S08**	**A**	500 (50Hz) 448 (60Hz)	246	230	**140**	**190**	**17**	**4**	54	116	134 (50Hz) 108 (60Hz)	207	190	225	M25x1,5
1.57 1.24	1.36 1.00	19 13	3.33 4.23	**MVSI 10/1110E-S08**	**A**	574	246	230	**140**	**190**	**17**	**4**	54	116	171	207	190	225	M25x1,5
1.57 1.24	1.36 1.00	19 13	3.33 4.23	**MVSI 10/1400E-S08**	**A**	574	246	230	**140**	**190**	**17**	**4**	54	116	171	207	190	225	M25x1,5
2.09 1.81	2.00 1.70	15 10	3.63 4.73	**MVSI 10/1610E-S08**	**A**	617 (50Hz) 537 (60Hz)	272	275	**155**	**225**	**22**	**4**	70	130	177 (50Hz) 137 (60Hz)	238	210	253	M25x1,5
2.85 2.19	2.75 2.10	9 8	4.50 4.89	**MVSI 10/2100E-S08**	**A**	663 (50Hz) 617 (60Hz)	272	275	**155**	**225**	**22**	**4**	70	130	200 (50Hz) 177 (60Hz)	238	210	253	M25x1,5
3.90	3.70	8	5.31	**MVSI 10/2610E-S02**	**A**	666	321	310	**155**	**255**	**23.5**	**4**	77	157	178	277	215	295	M25x1,5
4.28 3.71	4.30 3.60	8 5	4.82 5.56	**MVSI 10/3000E-S02**	**A**	712	321	310	**155**	**255**	**23.5**	**4**	77	157	201	277	215	295	M25x1,5
4.85 4.28	4.60 4.00	7 6	5.88 6.66	**MVSI 10/3810E-S02**	**A**	734	347	340	**180**	**280**	**26**	**4**	80	165	200	303	240	320	M32x1,5
6.18 5.42	6.00 5.20	10 6	5.23 5.96	**MVSI 10/4700E-S02**	**A**	796	347	340	**180**	**280**	**26**	**4**	80	165	233	303	240	320	M32x1,5
6.18 5.42	6.00 5.20	10 6	5.23 5.96	**MVSI 10/5150E-S02**	**A**	826	347	340	**180**	**280**	**26**	**4**	80	165	248	303	240	320	M32x1,5
6.65	6.10	10	4.64	**MVSI 10/5200E-S02**	**A**	744	370	390	**200**	**320**	**28**	**4**	90	180	192	330	270	350	M32x1,5
6.65	6.10	10	4.64	**MVSI 10/5700E-S02**	**A**	840	370	390	**200**	**320**	**28**	**4**	90	180	240	330	270	350	M32x1,5
7.60	7.00	5.3	6.67	**MVSI 10/6600E-S02**	**C**	750	437	460	**125**	**380**	**39**	**6**	35	215	174	387	320	414	M32x1,5
9.98	9.10	7	6.00	**MVSI 10/10000E-S02**	**C**	862	437	460	**125**	**380**	**39**	**6**	35	215	230	387	320	414	M32x1,5
9.98	9.10	7	6.00	**MVSI 10/11200E-S02**	**C**	912	437	460	**125**	**380**	**39**	**6**	35	215	255	387	320	414	M32x1,5

t_E (s) = set time t_E from IEC/EN 60079-7. I_A/I_N = ratio between start-up current and maximum current.
Several sizes are available with different mounting bolt patterns. Please contact sales office at Italvibras.

MVSI-E

8 poles - 750/900 rpm

	Description			Mechanical specifications								Electrical specifications					
	Code	Type	SIZE	Static moment* kgmm		Centrifugal force kg		kN		Weight kg		Temp. class (G)	Temp. class (D)	Max input power W		Power rating W	
				50 Hz	60 Hz	50 Hz	60 Hz	50 Hz	60 Hz	50 Hz	60 Hz			50 Hz	60 Hz	50 Hz	60 Hz
three-phase	6E2568	**MVSI 075/150E-S02**	20	163	163	**104**	**149**	**1.02**	**1.46**	19.0	19.0	T3	130°C	230	250	100	110
	6E2575	**MVSI 075/250E-S02**	30	286	286	**181**	**260**	**1.76**	**2.55**	27.5	27.5	T3	130°C	350	350	190	205
	6E2615	**MVSI 075/400E-S02**	35	457	457	**288**	**415**	**2.83**	**4.07**	36.5	36.5	T4	120°C	280	300	135	150
	6E2609	**MVSI 075/660E-S08**	40	723	723	**456**	**656**	**4.47**	**6.44**	48.0	48.0	T3	120°C	500	525	275	302
	6E2610	**MVSI 075/910E-S08**	50	1012	1012	**637**	**917**	**6.25**	**9.00**	58.0	58.0	T3 T4	120°C	600 450	670 500	336 225	380 255
	6E2618	**MVSI 075/1310E-S08**	60	1464	1464	**922**	**1327**	**9.04**	**13.0**	83.0	83.0	T3	150°C	950	1100	646	740
	6E2891	**MVSI 075/2110E-S02**	70	2326	2326	**1463**	**2107**	**14.4**	**20.7**	130	130	T3	135°C	1500	1650	1065	1225
	6E2884	**MVSI 075/3110E-S02**	80	3421	3421	**2152**	**3099**	**21.1**	**30.4**	188	188	T3	135°C	2000	2200	1460	1600
	6E2515	**MVSI 075/3800E-S02**	80	4206	4206	**2645**	**3808**	**25.9**	**37.4**	204	204	T3	135°C	2500	3000	1800	2100
	6E2862	**MVSI 075/4200E-S02**	90	4658	4658	**2930**	**4218**	**28.7**	**41.4**	228	228	T3	135°C	2630	2990	1900	2180
	6E2826	**MVSI 075/5300E-S02**	90	5838	5838	**3672**	**5287**	**36.0**	**51.9**	258	258	T3	135°C	3520	3800	2570	2775
	6E2870	**MVSI 075/10000E-S02**	97	12390	10973	**7792**	**9937**	**76.4**	**97.5**	438	419	T3	135°C	5100	5800	4100	4500

* Working moment = 2 x static moment.

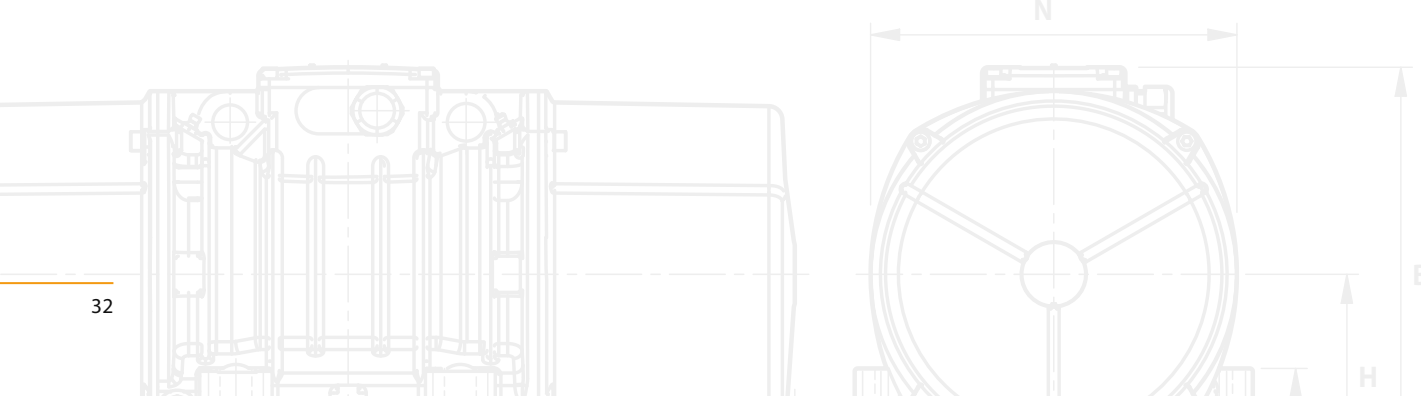

Fig. A

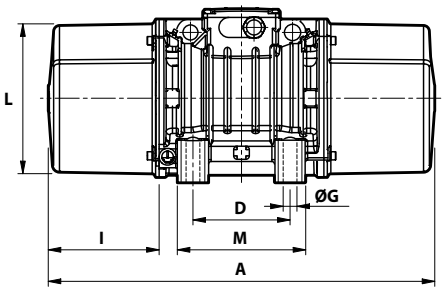

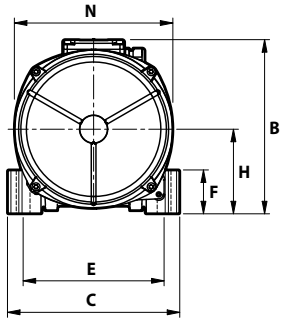

Fig. C

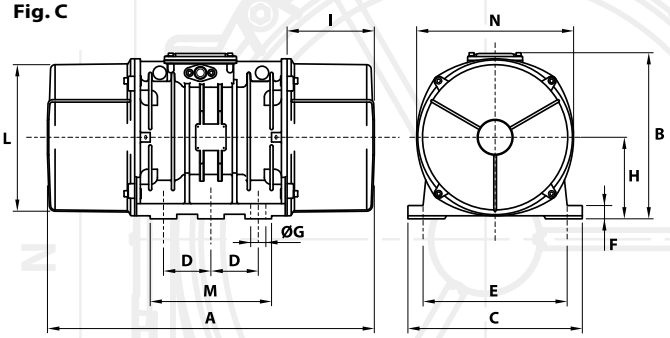

Dimensional specifications (mm)

Max. current A 400 V 50 Hz	Max. current A 460 V 60 Hz	t_E (s)	I_A/I_N	Type	Fig.	A	B	C	Holes D	Holes E	Holes øG	Holes N°	F	H	I	L	M	N	Cable entry thread
0.67	0.64	25	2.00	**MVSI 075/150E-S02**	**A**	344	203	167	**105**	**140**	**13**	**4**	30	82.5	93	145	140	160	M25x1,5
0.86	0.80	25	2.47	**MVSI 075/250E-S02**	**A**	394	216	205	**120**	**170**	**17**	**4**	45	93.5	106	170	160	182	M25x1,5
0.57	0.56	30	1.66	**MVSI 075/400E-S02**	**A**	435	225	205	**120**	**170**	**17**	**4**	54	104.5	117.5	187	162	203	M25x1,5
1.14	1.10	30	2.15	**MVSI 075/660E-S02**	**A**	500	246	230	**140**	**190**	**17**	**4**	54	116	134	207	190	225	M25x1,5
1.33 1.14	1.30 1.10	30 25	2.14 2.50	**MVSI 075/910E-S02**	**A**	574	246	230	**140**	**190**	**17**	**4**	54	116	171	207	190	225	M25x1,5
2.09	2.10	30	2.63	**MVSI 075/1310E-S02**	**A**	617	272	275	**155**	**225**	**22**	**4**	70	130	177	238	210	253	M25x1,5
3.61	3.60	15	4.18	**MVSI 075/2110E-S02**	**A**	666	321	310	**155**	**255**	**23.5**	**4**	77	157	178	277	215	295	M25x1,5
5.13	5.00	13	3.96	**MVSI 075/3110E-S02**	**A**	734	347	340	**180**	**280**	**26**	**4**	80	165	202	303	240	320	M32x1,5
5.70	6.00	14	4.00	**MVSI 075/3800E-S02**	**A**	796	347	340	**180**	**280**	**26**	**4**	80	165	233	303	240	320	M32x1,5
6.18	6.20	14	3.84	**MVSI 075/4200E-S02**	**A**	744	370	390	**200**	**320**	**28**	**4**	90	180	192	330	270	350	M32x1,5
7.79	7.40	14	3.80	**MVSI 075/5300E-S02**	**A**	840	370	390	**200**	**320**	**28**	**4**	90	180	240	330	270	350	M32x1,5
11.4	11.0	17	3.50	**MVSI 075/10000E-S02**	**C**	1002	437	460	**125**	**380**	**39**	**6**	35	215	300	387	320	414	M32x1,5

t_E (s) = set time t_E from IEC/EN 60079-7. I_A/I_N = ratio between start-up current and maximum current.
Several sizes are available with different mounting bolt patterns. Please contact sales office at Italvibras.

MVSS

The MVSS stainless steel series vibrators are characterized by their total protection from liquids, dusts, aggressive agents and contaminants, thanks to the AISI 304 stainless steel casing and external components.
Line MVSS-P is available for potentially explosive dust atmospheres in conformity with ATEX Directive 94/9/EC.

Technical features

Power supply
Three-phase voltage from 24V to 690V, 50Hz or 60Hz or single-phase 100-130V 60Hz and 200-240V, 50Hz; suitable for use with an inverter from 20Hz to the base frequency with constant torque load profile.

Polarity
2, 4, 6 and 8 poles.

Conformity with European Directives
Low Voltage 2006/95/EC.

Reference Regulations
EN 60034-1.

Functioning
Continual service (S1) at maximum declared centrifugal force and electric power. Intermittent services are also possible depending on the type of vibrator and the operating conditions. For detailed information, contact our technical assistance office.

Centrifugal force
Range extended up to 4300 Kgf. (42.4 KN), with centrifugal force adjustable from 0 to 100%.

Mechanical protection
IP 66 according to IEC 529, EN 60529.

Insulation class
Class F (155°C), class H (180°C) on request.

Tropicalization
Standard on all vibrators, with vacuum encapsulation up to size 35, with “drop by drop” trickle system for larger sizes.

Ambient temperature
From -20°C to +40°C. Versions for higher or lower temperatures are available on request.

Vibrator thermal protection
Standard PTC rated thermistor heat detectors 130°C (DIN 44081-44082) on size 70, on request for smaller sizes. On request, thermistors with different temperatures and anti-condensation heaters.

Fixing of the vibrator
In all positions and therefore without restriction.

Lubrication
All vibrators are lubricated in the factory and do not require further lubrication if used in normal operating conditions (“FOR LIFE” lubrication). In heavy duty operating conditions periodical re-lubrication may be applied to size 35 and larger.

Terminal box
Large fixed electrical connections, with terminal board cover in stainless steel AISI 304. Special shaped terminals allow to fix the power supply cable, protecting it from loosening.

Electric motor
Three-phase and single-phase asynchronous type. Designed for maximum starting torques and torque curves specific to vibrating machines. Insulated windings using vacuum encapsulating up to size 35; using the “drop by drop” trickle system with class H resin for larger sizes. The rotor is die cast aluminium.

Casing
In stainless steel AISI 304, with especially studied design to reduce deposits of dusts and liquids.

Bearing flange
Constructed in cast iron (spheroidal or grey) or in aluminium with steel bearing seat. The geometry of the flange transmits the load to the casing uniformly.

Bearings
The lower and upper bearings have been studied to support the relative load and therefore they have a particular geometry, especially designed and made for Italvibras.

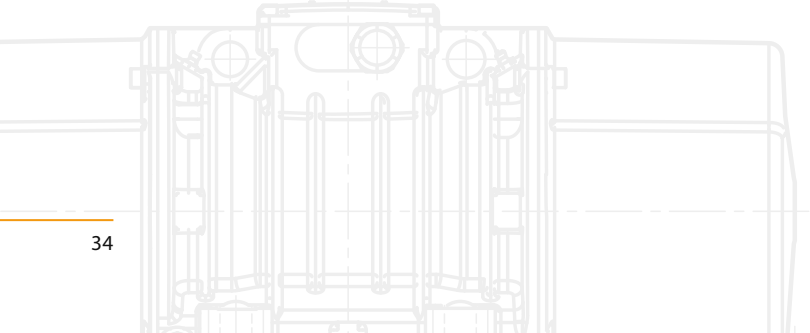

MVSS-P

Category: II 2 D

Level of protection: IP66

Temperature class: 120°C

EC certificate: LCIE 03 ATEX 6005 X

Zones of use: 21, 22

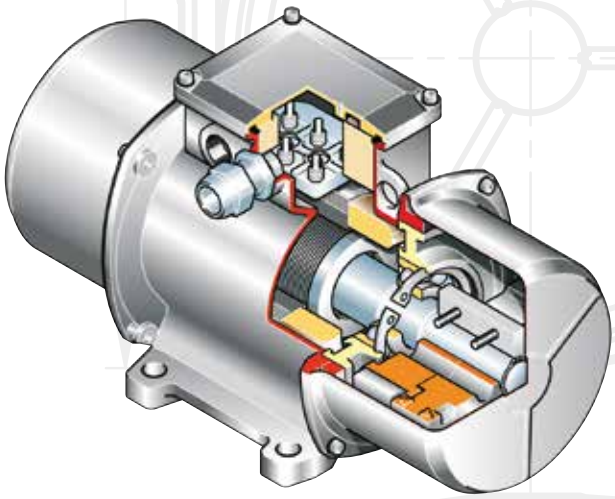

Motor shaft
In treated steel alloy (Isothermic hardening) resistant to stress.

Eccentric weights
Allow continual adjustment of the centrifugal force. This adjustment is realized by a graduated scale, which expresses the centrifugal force as a percentage of the maximum centrifugal force.
A patented system (patent N° MO98A000194), called ARS, prevents adjustment errors.

Weight covers
In stainless steel AISI 304 with thickness measuring 1.2 to 1.5mm, to unite mechanical resistance to the guaranteed protection of stainless steel.

Surface treatment
Electro polishing of the surface to obtain a smooth, bright, uniform surface.

External screws
In stainless steel AISI 304.

Other features
Identification plate in AISI 316L stainless steel.

Certifications MVSS

Regulation CAN/CSA - C22.2 N. 100-95, file n° LR100948 Class 4211 01 – Motors and generators.

Mechanical protection IP66 (EN 60529), protection against impacts IK 08 (EN 50102)

Certificate GOST-R, standards GOST 16264.1-85, GOST 16264.0-85, GOST R 51689-2000

Comply with the applicable European Union directives

Certifications MVSS-P

II 2 D - Temperature class 120°C - CENELEC EN 50014 - EN 50281-1-1 Certificate n. LCIE 03 ATEX 6005 X

Compliance with applicable European Union directives: Low Voltage 2006/95/CE, ATEX (94/9/CE),

MVSS

2 poles - 3000/3600 rpm

	Description				Mechanical specifications								Electrical specifications			
	Code	Type	SIZE		Static moment* kgmm		Centrifugal force kg		Centrifugal force kN		Weight kg		Max input power W		Max. current A 400 V 50 Hz	Max. current A 460 V 60 Hz
					50 Hz	60 Hz	50 Hz	60 Hz	50 Hz	60 Hz	50 Hz	60 Hz	50 Hz	60 Hz		
three-phase	600328	**MVSS 3/100-S02**	00	•	12.0	12.0	**121**	**174**	**1.19**	**1.71**	7.80	7.80	180	180	0.35	0.30
	600329	**MVSS 3/200-S02**	01	•	21.0	15.0	**211**	**218**	**2.07**	**2.14**	8.20	8.00	180	180	0.35	0.30
	600330	**MVSS 3/300-S02**	10	•	30.1	20.4	**304**	**297**	**2.98**	**2.91**	12.5	12.0	260	270	0.60	0.50
	600331	**MVSS 3/500-S02**	20	•	49.9	32.4	**503**	**471**	**4.93**	**4.62**	18.5	17.5	450	500	0.80	0.75
	600515	**MVSS 3/800-S08**	30	•	78.0	52.0	**785**	**754**	**7.70**	**7.40**	25.0	24.0	650	685	1.10	1.00
	600333	**MVSS 3/1100-S02**	35	•	110	73.0	**1105**	**1061**	**10.8**	**10.4**	30.0	29.0	1000	1200	1.75	1.75
	600334	**MVSS 3/1510-S02**	40	•	153	102	**1545**	**1483**	**15.2**	**14.5**	39.6	38.0	1400	1450	2.30	2.00
	600335	**MVSS 3/2010-S02**	50	•	205	128	**2059**	**1853**	**20.2**	**18.2**	48.7	46.3	2200	2200	3.50	3.00
															220 V 50 Hz	115 V 60 Hz
single-phase	600328	**MVSS 3/100-S02**	00	•	12.0	12.0	**121**	**174**	**1.19**	**1.71**	7.80	7.80	165	165	0.75	1.52
	600329	**MVSS 3/200-S02**	01	•	21.0	15.0	**211**	**218**	**2.07**	**2.14**	8.20	8.00	165	165	0.75	1.52
	600330	**MVSS 3/300-S02**	10	•	30.1	20.4	**304**	**297**	**2.98**	**2.91**	12.5	12.0	280	280	1.25	2.40
	600331	**MVSS 3/500-S02**	20	•	49.9	32.4	**503**	**471**	**4.93**	**4.62**	18.5	17.5	500	500	2.30	4.50
	600515	**MVSS 3/800-S08**	30	•	78.0	52.0	**785**	**754**	**7.70**	**7.40**	25.0	24.0	700	750	3.25	7.00

* Working moment = 2 x static moment.

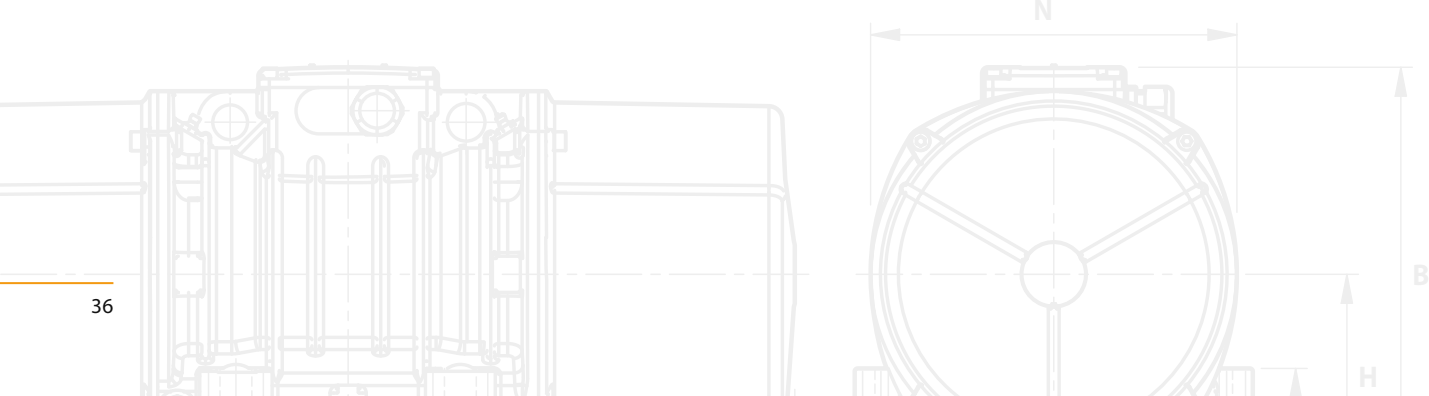

Fig. W

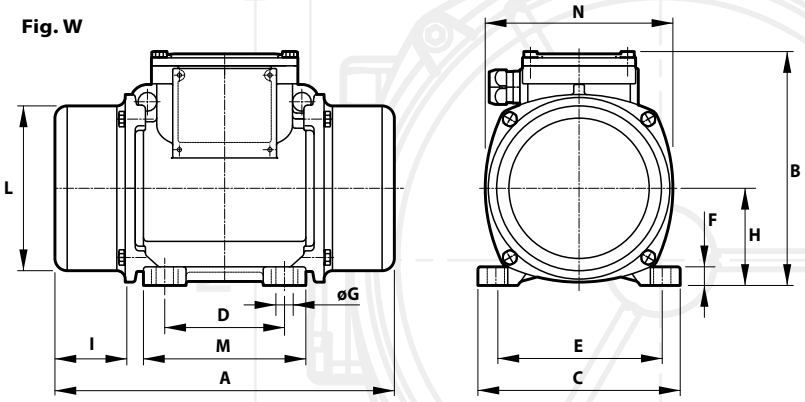

Dimensional specifications (mm)

I_A/I_N 50 Hz	I_A/I_N 60 Hz	Type	Fig.	A	B	C	Holes D	Holes E	Holes øG	Holes N°	F	H	I	L	M	N	Capacitor (µF) 220 V 50 Hz	Capacitor (µF) 115 V 60 Hz	Cable entry thread
2.68	3.00	**MVSS 3/100-S02**	**W**	209	151	125	**62-74****	**106**	**9**	**4**	10	61	45	100	102	117	-	-	M20x1.5
2.68	3.00	**MVSS 3/200-S02**	**W**	225	151	125	**62-74****	**106**	**9**	**4**	10	61	53	100	102	117	-	-	M20x1.5
3.47	4.20	**MVSS 3/300-S02**	**W**	255	176	152	**90**	**125**	**13**	**4**	12	73	54	124	122	141	-	-	M20x1.5
4.21	4.80	**MVSS 3/500-S02**	**W**	284	200	167	**105**	**140**	**13**	**4**	15	82.5	63	143	137	160	-	-	M25x1.5
3.83	6.00	**MVSS 3/800-S08**	**W**	308	205	205	**120**	**170**	**17**	**4**	17	93.5	63	168	160	182	-	-	M25x1.5
3.63	4.00	**MVSS 3/1100-S02**	**W**	354	232	205	**120**	**170**	**17**	**4**	20	104.5	77	181	162	203	-	-	M25x1.5
4.95	6.12	**MVSS 3/1510-S02**	**W**	438	245	230	**140**	**190**	**17**	**4**	25	116	103	201	180	225	-	-	M25x1.5
4.62	6.00	**MVSS 3/2010-S02**	**W**	438	245	230	**140**	**190**	**17**	**4**	25	116	103	201	180	225	-	-	M25x1.5
1.67	2.24	**MVSS 3/100-S02**	**W**	209	151	125	**62-74****	**106**	**9**	**4**	10	61	45	100	102	117	10	28	M20x1.5
1.67	2.24	**MVSS 3/200-S02**	**W**	255	151	125	**62-74****	**106**	**9**	**4**	10	61	53	100	102	117	10	28	M20x1.5
2.48	3.52	**MVSS 3/300-S02**	**W**	255	176	152	**90**	**125**	**13**	**4**	12	73	54	124	122	141	16	25	M20x1.5
3.35	4.22	**MVSS 3/500-S02**	**W**	284	200	167	**105**	**140**	**13**	**4**	15	82.5	63	143	137	160	12.5	50	M25x1.5
4.00	4.14	**MVSS 3/800-S08**	**W**	308	205	205	**120**	**170**	**17**	**4**	17	93.5	63	168	160	182	25	90	M25x1.5

I_A/I_N = ratio between start-up current and maximum current. ** Slot.

MVSS

4 poles - 1500/1800 rpm

	Description				Mechanical specifications								Electrical specifications			
					Static moment* kgmm		Centrifugal force kg		Centrifugal force kN		Weight kg		Max input power W		Max. current A	
	Code	Type	SIZE		50 Hz	60 Hz	50 Hz	60 Hz	50 Hz	60 Hz	50 Hz	60 Hz	50 Hz	60 Hz	400 V 50 Hz	460 V 60 Hz
three-phase	601342	**MVSS 15/35-S02**	00	•	12.0	12.0	**30.2**	**43.5**	**0.30**	**0.43**	7.80	7.80	85	95	0.21	0.20
	601343	**MVSS 15/80-S02**	01	•	31.0	21.0	**77.9**	**76.1**	**0.76**	**0.75**	9.00	8.70	85	95	0.21	0.20
	601365	**MVSS 15/100-S02**	01	•	38.9	31.0	**97.9**	**112**	**0.96**	**1.10**	9.40	9.00	85	95	0.21	0.20
	601344	**MVSS 15/200-S02**	10	•	84.2	58.8	**213**	**214**	**2.09**	**2.10**	15.8	15.0	170	170	0.41	0.40
	601345	**MVSS 15/400-S02**	20	•	163	113	**412**	**411**	**4.04**	**4.03**	22.5	21.7	300	350	0.60	0.60
	601346	**MVSS 15/550-S02**	20	•	219	163	**552**	**592**	**5.42**	**5.81**	23.9	22.5	300	350	0.60	0.60
	601526	**MVSS 15/700-S08**	30	•	286	209	**720**	**760**	**7.06**	**7.46**	32.0	30.7	525	665	0.92	0.98
	601348	**MVSS 15/1100-S02**	35	•	415	271	**1045**	**982**	**10.3**	**9.63**	42.0	37.5	550	680	0.95	0.95
	601349	**MVSS 15/1410-S02**	40	•	561	400	**1413**	**1449**	**13.9**	**14.2**	53.0	50.0	900	1050	1.45	1.50
	601350	**MVSS 15/1710-S02**	50	•	715	485	**1798**	**1757**	**17.6**	**17.2**	58.5	54.5	1100	1200	2.00	1.90
	601351	**MVSS 15/2000-S02**	50	•	817	561	**2054**	**2033**	**20.1**	**19.9**	70.0	68.0	1350	1450	2.50	2.30
	601352	**MVSS 15/2410-S02**	60	•	962	674	**2420**	**2444**	**23.7**	**24.0**	82.0	76.0	1600	1700	3.20	3.00
	601353	**MVSS 15/3000-S02**	60	•	1235	858	**3106**	**3107**	**30.5**	**30.5**	92.0	89.0	1900	2000	3.80	3.50
	601354	**MVSS 15/3810-S02**	70	•	1526	1034	**3840**	**3744**	**37.7**	**36.7**	115	110	2200	2500	3.90	3.90
	601363	**MVSS 15/4300-S02**	70	•	1720	1173	**4326**	**4250**	**42.4**	**41.7**	122	117	2500	2800	4.80	4.65
															220 V 50 Hz	115 V 60 Hz
single-phase	601342	**MVSS 15/35-S02**	00	•	12.0	12.0	**30.2**	**43.5**	**0.30**	**0.43**	7.80	7.80	90	100	0.43	1.00
	601343	**MVSS 15/80-S02**	01	•	31.0	21.0	**77.9**	**76.1**	**0.76**	**0.75**	9.00	8.70	90	100	0.43	1.00
	601365	**MVSS 15/100-S02**	01	•	38.9	31.0	**97.9**	**112**	**0.96**	**1.10**	9.40	9.00	90	100	0.43	1.00
	601344	**MVSS 15/200-S02**	10	•	84.2	58.8	**213**	**214**	**2.09**	**2.10**	15.8	15.0	210	230	1.00	2.00
	601345	**MVSS 15/400-S02**	20	•	163	113	**412**	**411**	**4.04**	**4.03**	22.5	21.7	240	320	1.20	2.80
	601346	**MVSS 15/550-S02**	20	•	219	163	**552**	**592**	**5.42**	**5.81**	23.9	22.5	240	320	1.20	2.80
	601526	**MVSS 15/700-S08**	30	•	286	209	**720**	**760**	**7.06**	**7.46**	25.0	23.0	450	550	2.15	5.15

* Working moment = 2 x static moment.

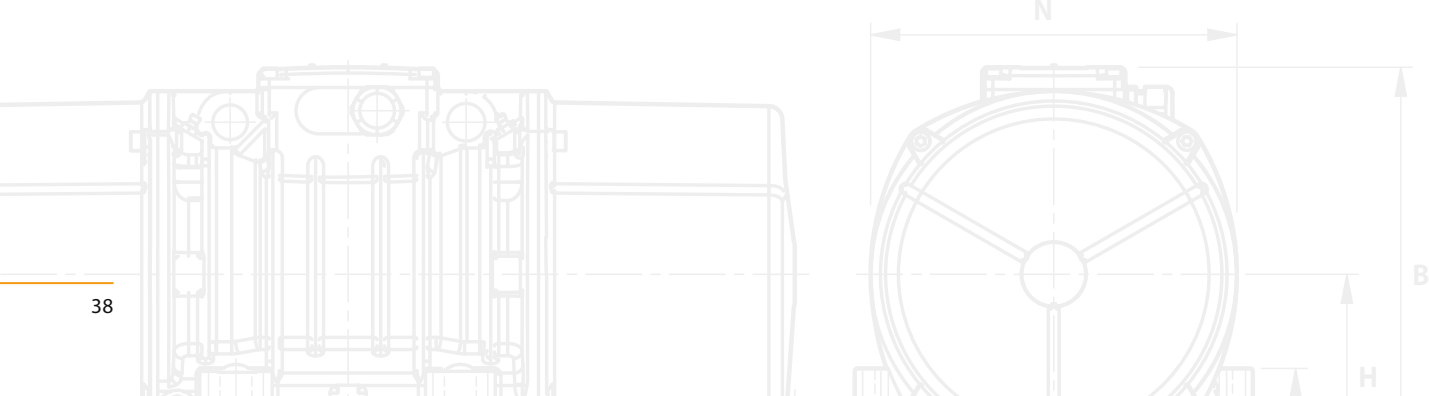

Fig. W

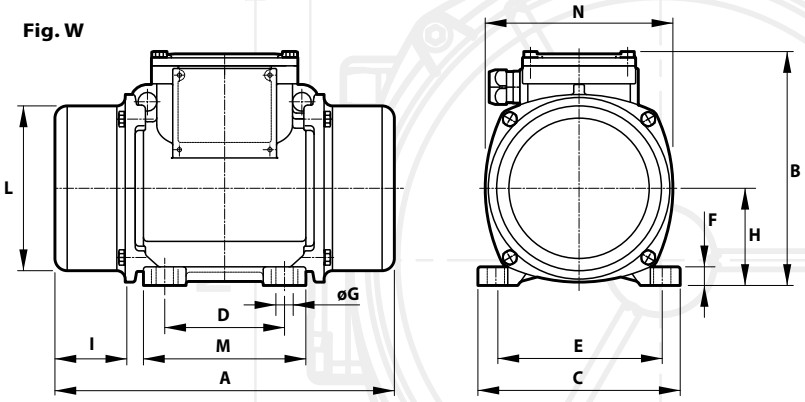

Dimensional specifications (mm)

I_A/I_N 50 Hz	I_A/I_N 60 Hz	Type	Fig.	A	B	C	Holes D	Holes E	Holes øG	Holes N°	F	H	I	L	M	N	Capacitor (µF) 220 V 50 Hz	Capacitor (µF) 115 V 60 Hz	Cable entry thread
1.78	1.95	**MVSS 15/35-S02**	**W**	209	151	125	**62-74****	**106**	**9**	**4**	10	61	45	100	102	117	-	-	M20x1.5
1.78	1.95	**MVSS 15/80-S02**	**W**	225	151	125	**62-74****	**106**	**9**	**4**	10	61	53	100	102	117	-	-	M20x1.5
1.78	1.95	**MVSS 15/100-S02**	**W**	241 (50Hz) 225 (60Hz)	151	125	**62-74****	**106**	**9**	**4**	10	61	61 (50Hz) 53 (60Hz)	100	102	117	-	-	M20x1.5
2.34	2.75	**MVSS 15/200-S02**	**W**	295	176	152	**90**	**125**	**13**	**4**	12	73	74	124	122	141	-	-	M20x1.5
3.33	3.50	**MVSS 15/400-S02**	**W**	340	200	167	**105**	**140**	**13**	**4**	15	82.5	91	143	137	160	-	-	M25x1.5
3.33	3.50	**MVSS 15/550-S02**	**W**	380	200	167	**105**	**140**	**13**	**4**	15	82.5	111	143	137	160	-	-	M25x1.5
3.48	3.43	**MVSS 15/700-S08**	**W**	378	205	205	**120**	**170**	**17**	**4**	17	93.5	98	168	160	182	-	-	M25x1.5
4.45	4.89	**MVSS 15/1100-S02**	**W**	436	232	205	**120**	**170**	**17**	**4**	20	104.5	118	181	162	203	-	-	M25x1.5
4.10	4.20	**MVSS 15/1410-S02**	**W**	438	245	230	**140**	**190**	**17**	**4**	25	116	103	201	180	225	-	-	M25x1.5
4.29	4.89	**MVSS 15/1710-S02**	**W**	490	245	230	**140**	**190**	**17**	**4**	25	116	129	201	180	225	-	-	M25x1.5
4.30	4.90	**MVSS 15/2000-S02**	**W**	560	245	230	**140**	**190**	**17**	**4**	25	116	164	201	180	225	-	-	M25x1.5
6.09	7.23	**MVSS 15/2410-S02**	**W**	525	285	275	**155**	**225**	**22**	**4**	30	135	131	231	205	253	-	-	M25x1.5
6.50	7.50	**MVSS 15/3000-S02**	**W**	601	285	275	**155**	**225**	**22**	**4**	30	135	169	231	205	253	-	-	M25x1.5
7.11	6.92	**MVSS 15/3810-S02**	**W**	589	323	310	**155**	**255**	**23.5**	**4**	35	155	139.5	269	215	295	-	-	M25x1.5
5.90	7.10	**MVSS 15/4300-S02**	**W**	589	323	310	**155**	**255**	**23.5**	**4**	35	155	139.5	269	215	295	-	-	M25x1.5
1.20	1.30	**MVSS 15/35-S02**	**W**	209	151	125	**62-74****	**106**	**9**	**4**	10	61	45	100	102	117	3.15	25	M20x1.5
1.20	1.30	**MVSS 15/80-S02**	**W**	225	151	125	**62-74****	**106**	**9**	**4**	10	61	53	100	102	117	3.15	25	M20x1.5
1.20	1.30	**MVSS 15/100-S02**	**W**	241 (50Hz) 225 (60Hz)	151	125	**62-74****	**106**	**9**	**4**	10	61	61 (50Hz) 53 (60Hz)	100	102	117	3.15	25	M20x1.5
1.50	1.85	**MVSS 15/200-S02**	**W**	295	176	152	**90**	**125**	**13**	**4**	12	73	74	124	122	141	5	25	M20x1.5
2.50	2.21	**MVSS 15/400-S02**	**W**	340	200	167	**105**	**140**	**13**	**4**	15	82.5	91	143	137	160	32/*12* ○	35	M25x1.5
2.50	2.21	**MVSS 15/550-S02**	**W**	380	200	167	**105**	**140**	**13**	**4**	15	82.5	111	143	137	160	32/*12* ○	40/*35* ○	M25x1.5
5.44	3.63	**MVSS 15/700-S08**	**W**	378	205	205	**120**	**170**	**17**	**4**	17	93.5	98	168	160	182	96/*16* ○	160/*40* ○	M25x1.5

I_A/I_N = ratio between start-up current and maximum current. ** Slot. ○ Start-up capacitor / *Running capacitor.*

MVSS

6 poles - 1000/1200 rpm

	Description				Mechanical specifications								Electrical specifications			
	Code	Type	SIZE		Static moment* kgmm		Centrifugal force kg		Centrifugal force kN		Weight kg		Max input power W		Max. current A 400 V 50 Hz	Max. current A 460 V 60 Hz
					50 Hz	60 Hz	50 Hz	60 Hz	50 Hz	60 Hz	50 Hz	60 Hz	50 Hz	60 Hz		
three-phase	602283	**MVSS 10/40-S02**	10	•	30.1	30.1	**35**	**49**	**0.33**	**0.47**	12.5	12.5	120	135	0.30	0.30
	602284	**MVSS 10/100-S02**	10	•	84.2	84.2	**94.3**	**136**	**0.93**	**1.33**	15.8	15.8	120	135	0.30	0.30
	602285	**MVSS 10/200-S02**	20	•	163	163	**183**	**264**	**1.80**	**2.59**	22.5	22.5	185	205	0.50	0.50
	602405	**MVSS 10/310-S08**	30	•	286	209	**321**	**338**	**3.15**	**3.32**	32.0	30.0	350	380	0.72	0.68
	602417	**MVSS 10/550-S08**	35	•	457	457	**512**	**737**	**5.02**	**7.23**	41.0	41.0	350	380	0.75	0.68
	602408	**MVSS 10/810-S08**	40	•	723	561	**809**	**905**	**7.84**	**8.88**	54.0	52.6	680	760	1.40	1.35
	602409	**MVSS 10/1110-S08**	50	•	1012	715	**1132**	**1151**	**11.1**	**11.3**	67.0	59.5	750	750	1.65	1.50
	602410	**MVSS 10/1400-S08**	50	•	1274	904	**1424**	**1485**	**14.0**	**14.5**	78.0	71.0	950	1000	1.80	1.70
	602411	**MVSS 10/1610-S08**	60	•	1464	962	**1638**	**1549**	**16.1**	**15.2**	94.0	83.0	1100	1300	2.20	2.20
	602412	**MVSS 10/2100-S08**	60	•	1927	1318	**2154**	**2102**	**21.1**	**20.6**	105	93.0	1500	1700	3.00	2.90
	602293	**MVSS 10/2610-S02**	70	•	2326	1706	**2601**	**2747**	**25.5**	**26.9**	130	116	1960	2100	4.10	3.75
	602294	**MVSS 10/3000-S02**	70	•	2690	1940	**3007**	**3124**	**29.5**	**30.6**	145	130	2200	2400	4.50	4.30

8 poles - 750/900 rpm

	Description				Mechanical specifications								Electrical specifications			
	Code	Type	SIZE		Static moment* kgmm		Centrifugal force kg		Centrifugal force kN		Weight kg		Max input power W		Max. current A 400 V 50 Hz	Max. current A 460 V 60 Hz
					50 Hz	60 Hz	50 Hz	60 Hz	50 Hz	60 Hz	50 Hz	60 Hz	50 Hz	60 Hz		
three-phase	602561	**MVSS 075/150-S02**	20	•	163	163	**104**	**149**	**1.02**	**1.46**	22.5	22.5	230	250	0.85	0.76
	602617	**MVSS 075/250-S08**	30	•	286	286	**181**	**260**	**1.76**	**2.55**	32.0	32.0	350	380	1.10	1.05
	602647	**MVSS 075/260-S08**	35	•	275	275	**174**	**250**	**1.71**	**2.45**	34.5	34.5	375	410	0.81	0.80
	602627	**MVSS 075/400-S08**	35	•	457	457	**288**	**415**	**2.83**	**4.07**	41.0	41.0	375	410	0.81	0.80
	602620	**MVSS 075/660-S08**	40	•	723	723	**456**	**656**	**4.47**	**6.44**	54.0	54.0	400	450	1.20	1.20
	602621	**MVSS 075/910-S08**	50	•	1012	1012	**637**	**917**	**6.25**	**9.00**	67.0	67.0	400	500	1.40	1.30
	602622	**MVSS 075/1310-S08**	60	•	1464	1464	**922**	**1327**	**9.04**	**13.0**	94.0	94.0	950	1100	2.20	2.20
	602567	**MVSS 075/2110-S02**	70	•	2326	2326	**1463**	**2107**	**14.4**	**20.7**	130	130	1500	1790	4.10	4.20

* Working moment = 2 x static moment.

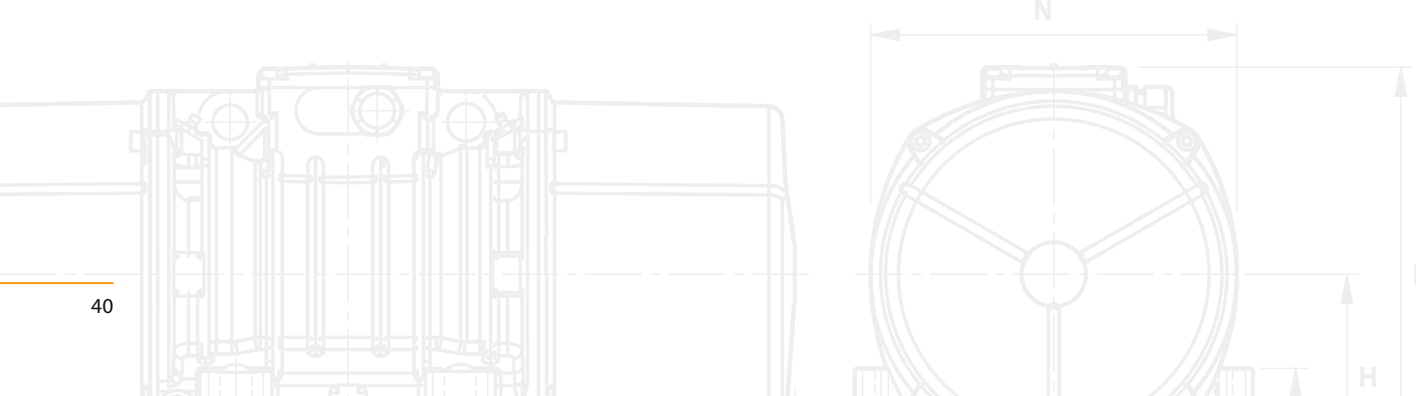

Fig. W

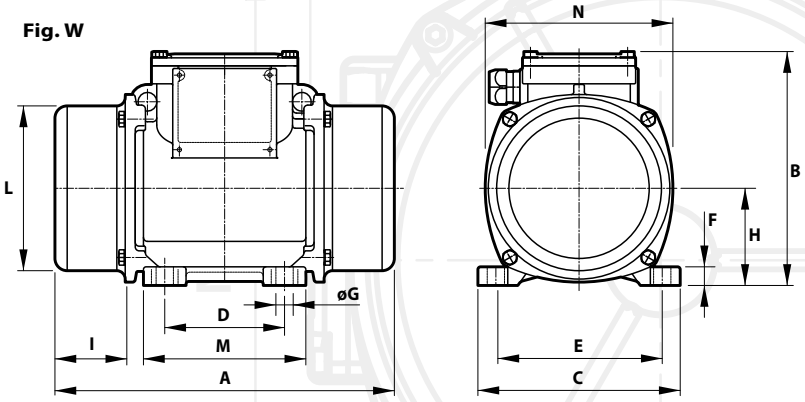

Dimensional specifications (mm)

I_A/I_N 50 Hz	I_A/I_N 60 Hz	Type	Fig.	A	B	C	Holes D	Holes E	Holes øG	Holes N°	F	H	I	L	M	N	Cable entry thread
1.90	2.07	**MVSS 10/40-S02**	**W**	255	176	152	**90**	**125**	**13**	**4**	12	73	54	124	122	141	M20x1.5
1.90	2.07	**MVSS 10/100-S02**	**W**	295	176	152	**90**	**125**	**13**	**4**	12	73	74	124	122	141	M20x1.5
2.72	3.10	**MVSS 10/200-S02**	**W**	340	200	167	**105**	**140**	**13**	**4**	15	82.5	91	143	137	160	M25x1.5
2.63	2.79	**MVSS 10/310-S08**	**W**	378	205	205	**120**	**170**	**17**	**4**	17	93.5	98	168	160	182	M25x1.5
2.53	3.68	**MVSS 10/550-S08**	**W**	436	232	205	**120**	**170**	**17**	**4**	20	104.5	118	181	162	203	M25x1.5
2.79	3.33	**MVSS 10/810-S08**	**W**	490 (50Hz) 438 (60Hz)	245	230	**140**	**190**	**17**	**4**	25	116	129 (50Hz) 103 (60Hz)	201	180	225	M25x1.5
3.33	4.13	**MVSS 10/1110-S08**	**W**	560	245	230	**140**	**190**	**17**	**4**	25	116	164	201	180	225	M25x1.5
3.05	3.65	**MVSS 10/1400-S08**	**W**	560	245	230	**140**	**190**	**17**	**4**	25	116	164	201	180	225	M25x1.5
4.21	4.05	**MVSS 10/1610-S08**	**W**	601 (50Hz) 525 (60Hz)	285	275	**155**	**225**	**22**	**4**	30	135	169 (50Hz) 131 (60Hz)	231	205	253	M25x1.5
4.50	4.20	**MVSS 10/2100-S08**	**W**	655 (50Hz) 601 (60Hz)	285	275	**155**	**225**	**22**	**4**	30	135	196 (50Hz) 169 (60Hz)	231	205	253	M25x1.5
5.35	5.60	**MVSS 10/2610-S02**	**W**	657 (50Hz) 589 (60Hz)	323	310	**155**	**255**	**23.5**	**4**	35	155	173.5 (50Hz) 139.5 (60Hz)	269	215	295	M25x1.5
4.35	4.81	**MVSS 10/3000-S02**	**W**	706	323	310	**155**	**255**	**23.5**	**4**	35	155	198	269	215	295	M25x1.5

Dimensional specifications (mm)

I_A/I_N 50 Hz	I_A/I_N 60 Hz	Type	Fig.	A	B	C	Holes D	Holes E	Holes øG	Holes N°	F	H	I	L	M	N	Cable entry thread
2.13	2.11	**MVSS 075/150-S02**	**W**	340	200	167	**105**	**140**	**13**	**4**	15	82.5	91	143	137	160	M25x1.5
2.03	2.29	**MVSS 075/250-S08**	**W**	378	205	205	**120**	**170**	**17**	**4**	17	93.5	98	168	160	182	M25x1.5
2.22	2.94	**MVSS 075/260-S08**	**W**	354	232	205	**120**	**170**	**17**	**4**	20	104.5	77	181	162	182	M25x1.5
2.22	2.38	**MVSS 075/400-S08**	**W**	436	232	205	**120**	**170**	**17**	**4**	20	104.5	118	181	162	203	M25x1.5
2.38	2.58	**MVSS 075/660-S08**	**W**	490	245	230	**140**	**190**	**17**	**4**	25	116	129	201	180	225	M25x1.5
2.38	2.85	**MVSS 075/910-S08**	**W**	560	245	230	**140**	**190**	**17**	**4**	25	116	164	201	180	225	M25x1.5
2.63	3.41	**MVSS 075/1310-S08**	**W**	601	285	275	**155**	**225**	**22**	**4**	30	135	169	231	205	253	M25x1.5
3.55	2.95	**MVSS 075/2110-S02**	**W**	657	323	310	**155**	**255**	**23.5**	**4**	35	155	173.5	269	215	295	M25x1.5

I_A/I_N = ratio between start-up current and maximum current.

CDX

The CDX explosion-proof vibrators have been designed for use in industrial processes in a potentially explosive atmosphere.
The enclosure of the CDX vibrators is equipped with increased thickness and joints to prevent the transmission of an internal explosion to the surrounding area.
The CDX series is characterized and enhanced by many different certifications, depending on the vibrator model.

Technical features

Power supply
Three-phase voltage from 24V to 690V (limit at 600V for UL and CSA certifications), 50Hz or 60Hz, or single-phase 100-130V 60Hz and 200-240V 50Hz; suitable for use with a PWM inverter from 20Hz to the base frequency with constant torque load profile.

Polarity
2, 4, 6 and 8 poles.

Reference Regulations and Directives
See table below.

Controls
The components that affect protection are 100% accurately controlled and recorded.

Functioning
Continual service (S1) at maximum declared centrifugal force and electric power. Intermittent services are also possible depending on the type of vibrator and the operating conditions. For detailed information, contact our technical assistance office.

Centrifugal force
Range extended to 22400 Kgf. (220 KN), with centrifugal force adjustable from 0 to 100%.

Mechanical protection
Mechanical protection IP66 according to IEC 529, EN 60529.

Protection against mechanical impacts
IK 08 according to IEC 68, EN 50102.

Insulation class
Class F (155°C).

Tropicalization
Standard on all vibrators, with vacuum encapsulation up to size 35, with "drop by drop" trickle system for larger sizes.

Ambient temperature
From -20°C to +40°C.

Vibrator thermal protection
With thermal protector at 130°C for the entire CDX range, or on request with PTC thermistors rated heat detectors 130°C (DIN 44081-44082).

Fixing of the vibrator
In all positions and therefore without restriction.

Lubrication
All vibrators are lubricated in the factory and do not require further lubrication if used in normal operating conditions ("FOR LIFE" lubrication). In heavy duty operating conditions periodical re-lubrication may be applied to size 40 and larger.

Terminal box
Large fixed electrical connections. The terminal cover, with increased thickness, is constructed to contain internal explosions. Special shaped terminals allow to fix the power supply cable, protecting it from loosening.

Electric motor
Three-phase and single-phase asynchronous type. Designed for maximum starting torques and torque curves specific to requirements of the vibrating machines. Insulated windings using vacuum encapsulating up to size 35; using the "drop by drop" trickle system with Class H resin for the larger sizes. The rotor is die cast aluminium.

Casing
In high-tensile aluminium alloy up to size 30, in spheroidal cast iron for larger sizes. Patented shape that improves heat dispersion and lowers normal running temperature with full load.
An external earthing screw is located on the casing as prescribed by Regulation IEC/EN 60079-0.

Bearing flange
Constructed in spheroidal or grey cast iron.
The geometry of the flange transmits the load to the casing uniformly.

Bearings
Custom made with particular geometry, especially designed for Italvibras, suitable to support both high radial and axial loads.

The CDX-G series, obtained by the CDX series, is specifically designed for use in industrial processes in a potentially explosive gas atmosphere, they are commonly used on oil and gas drilling rigs. The CDX-G line has weight covers and terminal box covers with special protection coatings; upon request, weight covers can be supplied in stainless steel.

	series CDX	series CDX-G
Approvals c UL us	Class I, Groups CD Class II, Groups EFG Oper. Temp. T4 (135°C) (Amb. Temp. -20°C ÷ +40°C)	Class I, Groups CD Oper. Temp. T2C (230°C) (Amb. Temp. -20°C ÷ +60°C)
Ex	ATEX II 2 GD Ex d IIB 120°C Gb Ex tb IIIC T120°C Db (Amb. Temp. -20°C ÷ +40°C)	ATEX II 2 G Ex d IIB 160°C Gb (Amb. Temp. -20°C ÷ +60°C)
IECEx	Ex d IIB T120°C Gb Ex tb IIIC T120°C Db (Amb. Temp. -20°C ÷ +40°C)	Ex d IIB T160°C Gb (Amb. Temp. -20°C ÷ +60°C)

Motor shaft
In treated steel alloy (Isothermic hardening) resistant to stress.

Eccentric weights
Allow continual adjustment of the centrifugal force. This adjustment is realized by a graduated scale, which expresses the centrifugal force as a percentage of the maximum centrifugal force.
A patented system (patent N° MO98A000194), called ARS, prevents adjustment errors.

Weight covers
In aluminium alloy.
Special coatings provided on CDX-G types. On request available also in stainless steel for CDX-G types.

Painting
Electrostatic surface treatment based on polymerised epoxy polyester powder in oven at 200°C. Tested in salt spray for 500 hours.

Other features
The CDX series is supplied without cable gland and with NPT threaded conduit opening.

Several sizes are available with different mounting bolt patterns. Please contact sales office at Italvibras.

Certifications

c SP us

Certificate: LR 100948. Category: Class I, Groups C,D; Class II, Groups E, F, G. Temperature Class: T4 (135°C). Standards: CAN/CSA C22.2. Zones of use: 1,2*

IMFR

Certification: CIMFR and DGMS for Indian. Category: Ex d II B 120°C, IP 66 Regulations: IS/IEC 60079-0, IS/IEC 60079-1, IS4691-1985. Areas of use: 1, 2

c UL us

Certificate: E129825. Category: Class I, Groups C and D; Class II, Groups E, F and G. Temperature class: T4 (135°C). Regulations: UL N° 674-886. Areas of use: 1, 2*

IECEx

Certificate of Conformity n° IECEx UL 09.0034X following standards IEC 60079-0, IEC 60079-1, IEC 60079-31

Ex d D

Certificate: DEMKO 07 ATEX 0612032X. Category: II 2 GD - Ex d IIB 120°C Gb Ex tb IIIC T120°C Db. Directive: ATEX 94/9/EC, CENELEC EN 60079-0, EN 60079-1, EN 60079-31. Zones of use: 1, 2, 21, 22

CE

Comply with the applicable European Union directives

PG

GGTN Permit and Gost-R certificate for explosion-proof Ex d: GOST R 51330.0-99, GOST R 51330.1-99, GOST R IEC 61241-1-1-99.

KCs

KOSHA Korea Certificate n° 11-AV4BO-0353/4/5/6/7/8/60 Ex d IIB 120°C - Ex td A21 IP66 T120°C

Ex d sira

Certificate: SIRA 00 ATEX 1026 Category: II 2 G, Ex d IIB. Temperature class: T4 (135°) Directives: ATEX 94/9/EC, CENELEC EN 60079-0, EN 60079-1. Areas of use: 1,2

* Areas 1, 2 indicated with this symbol are areas according to classification in force in USA and Canada. They cannot be referred to the ATEX Directive.

italvibras g.silingardi

CDX

2 poles - 3000/3600 rpm

	Code	Type	SIZE	Certifications	Static moment* kgmm 50 Hz	Static moment* kgmm 60 Hz	Centrifugal force kg 50 Hz	Centrifugal force kg 60 Hz	Centrifugal force kN 50 Hz	Centrifugal force kN 60 Hz	Weight kg 50 Hz	Weight kg 60 Hz	Max input power W 50 Hz	Max input power W 60 Hz	Power rating W 50 Hz	Power rating W 60 Hz
three-phase	600384	**CDX 3/300-G/D**	10	•	30.1	20.4	**304**	**297**	**2.98**	**2.91**	11.5	11.0	260	270	180	190
	600385	**CDX 3/500-G/D**	20	•	49.9	32.4	**503**	**471**	**4.93**	**4.62**	17.0	16.0	450	500	330	390
	600387	**CDX 3/800-G/D**	30	•	78.0	52.0	**785**	**754**	**7.70**	**7.40**	23.3	22.4	650	685	500	520
	600389	**CDX 3/1100-G/D**	35	• • •	110	73.0	**1105**	**1061**	**10.8**	**10.4**	34.0	33.0	600	710	480	550
	600437	**CDX 3/1500-G/D**	40	• • •	161	111	**1625**	**1602**	**15.9**	**17.7**	56.1	53.6	1000	1200	850	925
	600317	**CDX 3/2100-G/D**	50	• • •	209	144	**2114**	**2080**	**20.7**	**20.4**	62.0	60.7	1000	1260	900	1095
	600320	**CDX 3/2300-G/D**	60	• • • •	222	159	**2236**	**2300**	**21.9**	**22.5**	82.5	79.5	2000	2200	1500	1606
	600323	**CDX 3/3200-G/D**	70	• • •	344	215	**3457**	**3112**	**33.9**	**30.5**	108	104	3100	3250	2570	2570
	600486	**CDX 3/4700-G/D**	80	• • •	469	329	**4710**	**4760**	**46.2**	**46.7**	144	139	4500	4500	3680	3680
single-phase	600384	**CDX 3/300-G/D**	10	•	30.1	20.4	**304**	**297**	**2.98**	**2.91**	11.5	11.0	280	280	180	200
	600385	**CDX 3/500-G/D**	20	•	49.9	32.4	**503**	**471**	**4.93**	**4.62**	17.0	16.0	500	500	340	350
	600387	**CDX 3/800-G/D**	30	•	78.0	52.0	**785**	**754**	**7.70**	**7.40**	23.3	22.4	700	750	450	500

4 poles - 1500/1800 rpm

	Code	Type	SIZE	Certifications	Static moment* kgmm 50 Hz	Static moment* kgmm 60 Hz	Centrifugal force kg 50 Hz	Centrifugal force kg 60 Hz	Centrifugal force kN 50 Hz	Centrifugal force kN 60 Hz	Weight kg 50 Hz	Weight kg 60 Hz	Max input power W 50 Hz	Max input power W 60 Hz	Power rating W 50 Hz	Power rating W 60 Hz
three-phase	601409	**CDX 15/200-G/D**	10	•	84.2	58.8	**213**	**214**	**2.09**	**2.10**	14.0	13.0	170	170	95	95
	601410	**CDX 15/400-G/D**	20	•	163	113	**412**	**411**	**4.04**	**4.03**	21.4	20.0	300	350	215	275
	601411	**CDX 15/550-G/D**	20	•	219	163	**552**	**592**	**5.42**	**5.81**	22.8	21.4	300	350	215	275
	601412	**CDX 15/700-G/D**	30	•	286	209	**720**	**760**	**7.06**	**7.46**	30.3	29.0	525	665	380	490
	601413	**CDX 15/1100-G/D**	35	• • •	415	271	**1045**	**982**	**10.3**	**9.63**	46.0	41.5	520	660	369	442
	601424	**CDX 15/1410-G/D**	40	• • •	561	400	**1413**	**1449**	**13.9**	**14.2**	65.6	61.0	750	1000	548	740
	601328	**CDX 15/1710-G/D**	50	• • •	715	485	**1798**	**1757**	**17.6**	**17.2**	70.0	67.5	1050	1300	882	1105
	601358	**CDX 15/2000-G/D**	50	• • •	817	561	**2054**	**2033**	**20.1**	**19.9**	75.0	69.0	1050	1300	882	1105
	601329	**CDX 15/2410-G/D**	60	• • • •	962	674	**2420**	**2444**	**23.7**	**24.0**	98.0	92.0	1500	1650	1305	1485
	601330	**CDX 15/3810-G/D**	70	• • •	1526	1034	**3840**	**3744**	**37.7**	**36.7**	133	128	2270	2250	1839	1845
	601487	**CDX 15/5010-G/D**	80	• • •	1990	1364	**5007**	**4941**	**49.1**	**48.5**	167	160	3140	3130	2600	2600
single-phase	601409	**CDX 15/200-G/D**	10	•	84.2	58.8	**213**	**214**	**2.09**	**2.10**	14.0	13.0	210	230	110	120
	601410	**CDX 15/400-G/D**	20	•	163	113	**412**	**411**	**4.04**	**4.03**	21.4	20.0	240	320	120	180
	601411	**CDX 15/550-G/D**	20	•	219	163	**552**	**592**	**5.42**	**5.81**	23.5	22.0	240	320	120	180
	601412	**CDX 15/700-G/D**	30	•	286	209	**720**	**760**	**7.06**	**7.46**	30.3	29.0	450	550	240	300

* Working moment = 2 x static moment.

Fig. A

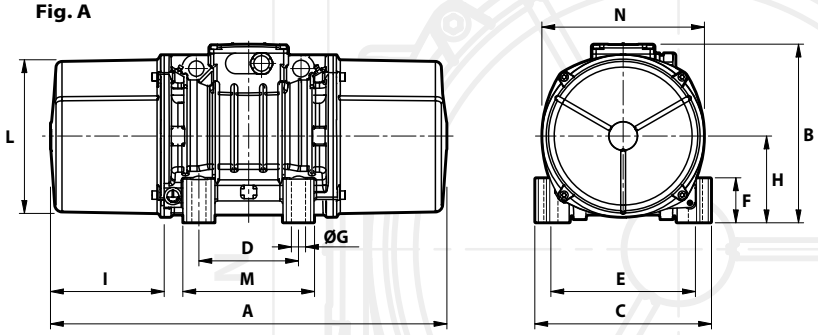

Dimensional specifications (mm)

Max. current A 400 V 50 Hz	Max. current A 460 V 60 Hz	I_A/I_N 50 Hz	I_A/I_N 60 Hz	Type	Fig.	A	B	C	Holes D	Holes E	Holes øG	Holes N°	F	H	I	L	M	N	Capacitor (µF) 220 V 50 Hz	Capacitor (µF) 115 V 60 Hz	Cable entry
0.60	0.50	3.47	4.20	**CDX 3/300-G/D**	**A**	255	191	152	**90**	**125**	**13**	**4**	28	77.5	54	130	128	150	-	-	NPT 1/2”
0.80	0.75	4.21	4.80	**CDX 3/500-G/D**	**A**	288	218	167	**105**	**140**	**13**	**4**	30	90	65	150	140	175	-	-	NPT 1/2”
1.10	1.00	3.83	6.00	**CDX 3/800-G/D**	**A**	314	230.5	205	**120**	**170**	**17**	**4**	45	102	66	177	162	200	-	-	NPT 1/2”
0.90	0.93	4.78	4.96	**CDX 3/1100-G/D**	**A**	446	248.5	210	**120**	**170**	**17**	**4**	52	112	118	192	160	218	-	-	NPT 3/4”
1.62	1.72	6.00	6.32	**CDX 3/1500-G/D**	**A**	468	278.5	235	**140**	**190**	**17**	**4**	65	116	108	210	185	225	-	-	NPT 3/4”
1.71	1.85	6.95	7.19	**CDX 3/2100-G/D**	**A**	520	278.5	235	**140**	**190**	**22**	**4**	65	116	134	210	185	225	-	-	NPT 3/4”
3.23	3.20	7.47	8.60	**CDX 3/2300-G/D**	**A**	572	312	270	**155**	**225**	**22**	**4**	52	135	146	238.5	200	253	-	-	NPT 3/4”
5.23	5.00	6.37	8.00	**CDX 3/3200-G/D**	**A**	594	342.5	310	**155**	**255**	**23.5**	**4**	65	155	137	279	210	295	-	-	NPT 3/4”
7.13	6.60	6.53	7.00	**CDX 3/4700-G/D**	**A**	638	367	335	**180**	**280**	**26**	**4**	70	175	154	303	235	320	-	-	NPT 3/4”
220 V 50 Hz	115 V 60 Hz																				
1.25	2.40	2.48	3.52	**CDX 3/300-G/D**	**A**	255	191	152	**90**	**125**	**13**	**4**	28	77.5	54	130	128	150	16	25	NPT 1/2”
2.30	4.50	3.35	4.22	**CDX 3/500-G/D**	**A**	288	218	167	**105**	**140**	**13**	**4**	30	90	65	150	140	175	12.5	50	NPT 1/2”
3.25	7.00	4.00	4.14	**CDX 3/800-G/D**	**A**	314	230.5	205	**120**	**170**	**17**	**4**	45	102	66	177	162	200	25	90	NPT 1/2”

Dimensional specifications (mm)

Max. current A 400 V 50 Hz	Max. current A 460 V 60 Hz	I_A/I_N 50 Hz	I_A/I_N 60 Hz	Type	Fig.	A	B	C	Holes D	Holes E	Holes øG	Holes N°	F	H	I	L	M	N	Capacitor (µF) 220 V 50 Hz	Capacitor (µF) 115 V 60 Hz	Cable entry
0.41	0.40	2.34	2.75	**CDX 15/200-G/D**	**A**	301	191	152	**90**	**125**	**13**	**4**	28	77.5	77	130	128	150	-	-	NPT 1/2”
0.60	0.60	3.33	3.50	**CDX 15/400-G/D**	**A**	350	218	167	**105**	**140**	**13**	**4**	30	90	96	150	140	175	-	-	NPT 1/2”
0.60	0.60	3.33	3.50	**CDX 15/550-G/D**	**A**	392	218	167	**105**	**140**	**13**	**4**	30	90	117	150	140	175	-	-	NPT 1/2”
0.92	0.98	3.48	3.43	**CDX 15/700-G/D**	**A**	394	230.5	205	**120**	**170**	**17**	**4**	45	102	106	177	162	200	-	-	NPT 1/2”
0.81	0.88	4.65	4.84	**CDX 15/1100-G/D**	**A**	446	248.5	210	**120**	**170**	**17**	**4**	52	112	118	192	160	218	-	-	NPT 3/4”
1.35	1.50	5.59	5.60	**CDX 15/1410-G/D**	**A**	468	278.5	235	**140**	**190**	**17**	**4**	65	116	108	210	185	225	-	-	NPT 3/4”
1.81	1.90	5.09	5.46	**CDX 15/1710-G/D**	**A**	520	278.5	235	**140**	**190**	**22**	**4**	65	116	134	210	185	225	-	-	NPT 3/4”
1.81	1.90	5.09	5.46	**CDX 15/2000-G/D**	**A**	594 (50Hz) 520 (60Hz)	278.5	235	**140**	**190**	**22**	**4**	65	116	171 (50Hz) 134 (60Hz)	210	185	225	-	-	NPT 3/4”
2.95	2.90	7.80	7.76	**CDX 15/2410-G/D**	**A**	572	312	270	**155**	**225**	**22**	**4**	52	135	146	238.5	200	253	-	-	NPT 3/4”
3.80	3.50	6.84	8.09	**CDX 15/3810-G/D**	**A**	594	342.5	310	**155**	**255**	**23.5**	**4**	65	155	137	279	210	295	-	-	NPT 3/4”
5.40	4.85	7.82	9.90	**CDX 15/5010-G/D**	**A**	638	367	335	**180**	**280**	**26**	**4**	70	175	154	303	235	320	-	-	NPT 3/4”
220 V 50 Hz	115 V 60 Hz																				
1.00	2.00	1.50	1.85	**CDX 15/200-G/D**	**A**	301	191	152	**90**	**125**	**13**	**4**	28	77.5	77	130	128	150	5	25	NPT 1/2”
1.20	2.80	2.50	2.50	**CDX 15/400-G/D**	**A**	350	218	167	**105**	**140**	**13**	**4**	30	90	96	150	140	175	32/12 ⚬	35	NPT 1/2”
1.20	2.80	2.50	2.50	**CDX 15/550-G/D**	**A**	392	218	167	**105**	**140**	**13**	**4**	30	90	117	150	140	175	32/12 ⚬	40/35 ○	NPT 1/2”
2.15	5.15	5.44	3.63	**CDX 15/700-G/D**	**A**	394	230.5	205	**120**	**170**	**17**	**4**	45	102	106	177	162	200	96/16 ⚬	160/40 ⚬	NPT 1/2”

I_A/I_N = ratio between start-up current and maximum current. ⚬ Start-up capacitor / *Running capacitor.*

Several sizes are available with different mounting bolt patterns. Please contact sales office at Italvibras.

CDX

6 poles - 1000/1200 rpm

	Description				Mechanical specifications								Electrical specifications			
	Code	Type	SIZE	Certifications	Static moment* kgmm		Centrifugal force kg		Centrifugal force kN		Weight kg		Max input power W		Power rating W	
					50 Hz	60 Hz	50 Hz	60 Hz	50 Hz	60 Hz	50 Hz	60 Hz	50 Hz	60 Hz	50 Hz	60 Hz
three-phase	602315	**CDX 10/40-G/D**	10	•	30.1	30.1	**35.0**	**49.0**	**0.331**	**0.476**	11.5	11.5	120	135	50	90
	602316	**CDX 10/100-G/D**	10	•	84.2	84.2	**94.3**	**136**	**0.925**	**1.33**	14.0	14.0	120	135	50	90
	602317	**CDX 10/200-G/D**	20	•	163	163	**183**	**264**	**1.80**	**2.59**	21.4	21.4	185	205	100	120
	602318	**CDX 10/310-G/D**	30	•	286	209	**321**	**338**	**3.15**	**3.32**	30.3	29.0	350	380	220	270
	602320	**CDX 10/550-G/D**	35	• • •	457	457	**512**	**737**	**5.02**	**7.23**	47.5	47.5	300	310	220	230
	602325	**CDX 10/810-G/D**	40	• • •	723	561	**809**	**905**	**7.94**	**8.88**	70.7	65.4	570	680	370	442
	602274	**CDX 10/1110-G/D**	50	• • •	1012	715	**1132**	**1151**	**11.1**	**11.3**	79.0	72.0	700	870	483	548
	602277	**CDX 10/1610-G/D**	60	• • • •	1464	962	**1638**	**1549**	**16.1**	**15.2**	109	98.0	1040	1250	738	913
	602280	**CDX 10/2610-G/D**	70	• • •	2326	1706	**2601**	**2747**	**25.5**	**26.9**	144	130	1725	1800	1470	1470
	602365	**CDX 10/3810-G/D**	80	• • •	3422	2380	**3826**	**3831**	**37.5**	**37.6**	200	182	2100	2300	1700	1850
	602201	**CDX 10/22000-G**	110	• •	20025	12553	**22386**	**20208**	**220**	**198**	928	898	15600	19000	11800	14700

8 poles - 750/900 rpm

	Description				Mechanical specifications								Electrical specifications			
	Code	Type	SIZE	Certifications	Static moment* kgmm		Centrifugal force kg		Centrifugal force kN		Weight kg		Max input power W		Power rating W	
					50 Hz	60 Hz	50 Hz	60 Hz	50 Hz	60 Hz	50 Hz	60 Hz	50 Hz	60 Hz	50 Hz	60 Hz
three-phase	602576	**CDX 075/150-G/D**	20	•	163	163	**104**	**149**	**1.02**	**1.46**	21.4	21.4	230	250	110	120
	602577	**CDX 075/250-G/D**	30	•	286	286	**181**	**260**	**1.76**	**2.55**	30.3	30.3	350	380	190	210
	602578	**CDX 075/400-G/D**	35	• • •	457	457	**288**	**415**	**2.83**	**4.07**	47.5	47.5	300	300	150	150
	602581	**CDX 075/660-G/D**	40	• • •	723	723	**456**	**656**	**4.47**	**6.44**	70.7	70.7	340	340	184	184
	602552	**CDX 075/910-G/D**	50	• • •	1012	1012	**637**	**917**	**6.25**	**9.00**	77.0	77.0	420	500	231	260
	602555	**CDX 075/1310-G/D**	60	• • • •	1464	1464	**922**	**1327**	**9.04**	**13.0**	109	109	750	850	480	560
	602558	**CDX 075/2110-G/D**	70	• • •	2326	2326	**1463**	**2107**	**14.4**	**20.7**	144	144	1480	1500	1036	1100
	602602	**CDX 075/3110-G/D**	80	• • •	3421	3421	**2152**	**3099**	**21.1**	**30.4**	196	196	1850	2100	1320	1400
	602513	**CDX 075/22000-G**	110	• •	28633	24508	**18005**	**22192**	**177**	**218**	1015	981	10000	13000	8100	10300

* Working moment = 2 x static moment.

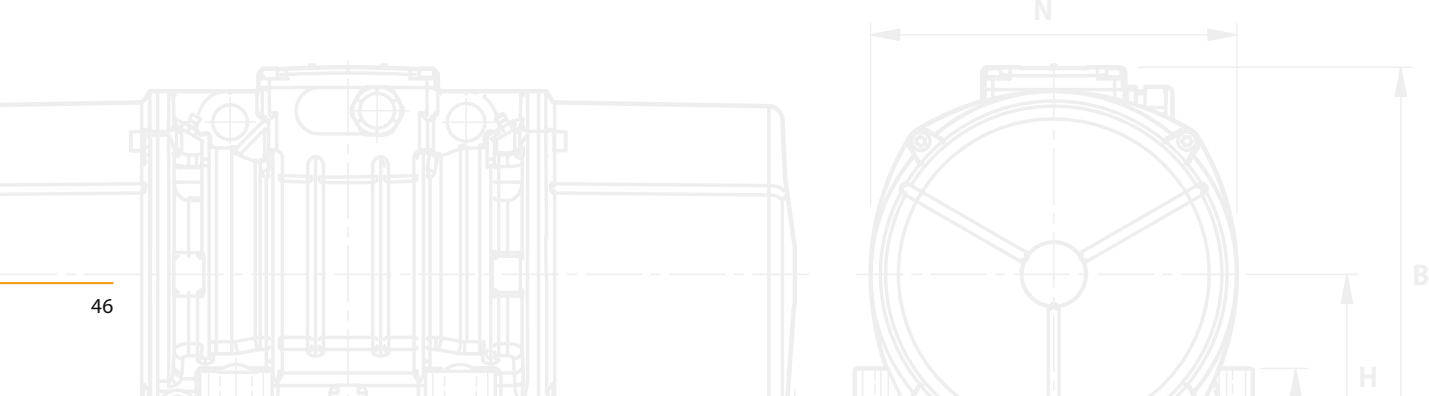

Fig. A

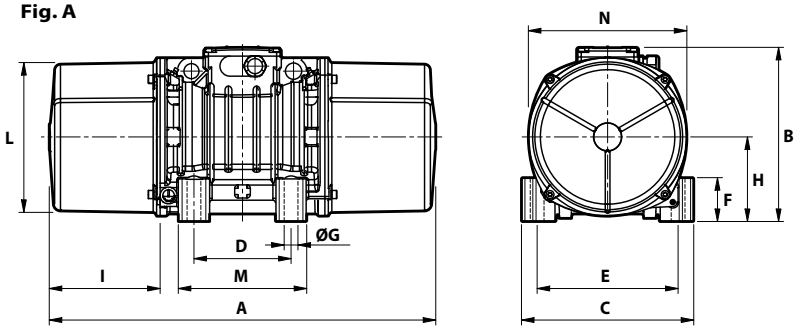

Fig. F

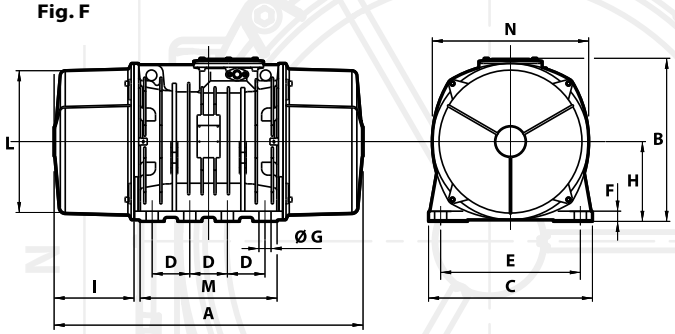

Dimensional specifications (mm)

Max. current A 400 V 50 Hz	Max. current A 460 V 60 Hz	I_A/I_N 50 Hz	I_A/I_N 60 Hz	Type	Fig.	A	B	C	Holes D	Holes E	Holes øG	Holes N°	F	H	I	L	M	N	Cable entry
0.30	0.30	1.90	2.07	**CDX 10/40-G/D**	**A**	255	191	152	**90**	**125**	**13**	**4**	28	77.5	54	130	128	150	NPT 1/2"
0.30	0.30	1.90	2.07	**CDX 10/100-G/D**	**A**	301	191	152	**90**	**125**	**13**	**4**	28	77.5	77	130	128	150	NPT 1/2"
0.50	0.50	2.72	3.10	**CDX 10/200-G/D**	**A**	350	218	167	**105**	**140**	**13**	**4**	30	90	96	150	140	175	NPT 1/2"
0.72	0.68	2.63	2.79	**CDX 10/310-G/D**	**A**	394	230.5	205	**120**	**170**	**17**	**4**	45	102	106	177	162	200	NPT 1/2"
0.57	0.61	3.89	3.77	**CDX 10/550-G/D**	**A**	446	248.5	210	**120**	**170**	**17**	**4**	52	112	118	192	160	218	NPT 3/4"
1.24	1.30	4.00	3.69	**CDX 10/810-G/D**	**A**	520 (50Hz) 468 (60Hz)	278.5	235	**140**	**190**	**17**	**4**	65	116	134 (50Hz) 108 (60Hz)	210	185	225	NPT 3/4"
1.52	1.65	4.15	4.24	**CDX 10/1110-G/D**	**A**	594 (50Hz) 520 (60Hz)	278.5	235	**140**	**190**	**22**	**4**	65	116	171 (50Hz) 134 (60Hz)	210	185	225	NPT 3/4"
2.09	2.10	4.93	5.24	**CDX 10/1610-G/D**	**A**	634 (50Hz) 572 (60Hz)	312	270	**155**	**225**	**22**	**4**	52	135	177 (50Hz) 146 (60Hz)	238.5	200	253	NPT 3/4"
3.80	3.70	5.40	6.03	**CDX 10/2610-G/D**	**A**	676	342.5	310	**155**	**255**	**23.5**	**4**	65	155	178	279	210	295	NPT 3/4"
4.75	4.75	4.19	4.67	**CDX 10/3810-G/D**	**A**	734	367	335	**180**	**280**	**26**	**4**	70	175	202	303	235	320	NPT 3/4"
25.2	25.5	5.70	5.88	**CDX 10/22000-G**	**F**	1150	607	610	**140**	**520**	**45**	**8**	38	297	297.5	542	510	582	NPT 1"

Dimensional specifications (mm)

Max. current A 400 V 50 Hz	Max. current A 460 V 60 Hz	I_A/I_N 50 Hz	I_A/I_N 60 Hz	Type	Fig.	A	B	C	Holes D	Holes E	Holes øG	Holes N°	F	H	I	L	M	N	Cable entry
0.85	0.76	2.13	2.11	**CDX 075/150-G/D**	**A**	350	218	167	**105**	**140**	**13**	**4**	30	90	96	150	140	175	NPT 1/2"
1.10	1.05	2.03	2.29	**CDX 075/250-G/D**	**A**	394	230.5	205	**120**	**170**	**17**	**4**	45	102	106	177	162	200	NPT 1/2"
0.57	0.58	2.47	2.50	**CDX 075/400-G/D**	**A**	446	248.5	210	**120**	**170**	**17**	**4**	52	112	118	192	160	218	NPT 3/4"
0.87	0.90	2.87	3.11	**CDX 075/660-G/D**	**A**	520	278.5	235	**140**	**190**	**17**	**4**	65	116	134	210	185	225	NPT 3/4"
1.00	1.10	2.91	2.91	**CDX 075/910-G/D**	**A**	594	278.5	235	**140**	**190**	**22**	**4**	65	116	171	210	185	225	NPT 3/4"
1.52	1.90	3.68	3.05	**CDX 075/1310-G/D**	**A**	634	312	270	**155**	**225**	**22**	**4**	52	135	177	238.5	200	253	NPT 3/4"
3.52	3.45	3.58	3.91	**CDX 075/2110-G/D**	**A**	676	342.5	310	**155**	**255**	**23.5**	**4**	65	155	178	279	210	295	NPT 3/4"
4.85	5.00	4.21	4.70	**CDX 075/3110-G/D**	**A**	734	367	335	**180**	**280**	**26**	**4**	70	175	202	303	235	320	NPT 3/4"
21.4	22.0	6.97	5.50	**CDX 075/22000-G**	**F**	1150	607	610	**140**	**520**	**45**	**8**	38	297	297.5	542	510	582	NPT 1"

I_A/I_N = ratio between start-up current and maximum current.

Several sizes are available with different mounting bolt patterns. Please contact sales office at Italvibras.

MVTX

The MVTX explosion-proof screen vibrators have been designed for use in industrial processes in a potentially explosive atmosphere.
They are used for industrial processes on screens.
The enclosure of these screen vibrators is equipped with increased thickness and joints to prevent the transmission of an internal explosion to the surrounding area.
Explosion-proof screen vibrators bear the UL, cUL, ATEX and IECEx markings.

Technical features

Power supply
Three-phase voltage up to 690V (maximum 600V for UL and CSA), 50Hz or 60Hz (fixed) or 20 to 70Hz (variable).
Suitable for use with a variable frequency drive from 20Hz to the base frequency with constant torque load profile.

Polarity
4 poles typical. 2, 6, 8 poles are also available.

Reference Regulations and Directives
See tables.

Controls
The components that affect protection mode are 100% accurately controlled and report is recorded for complete traceability.

Functioning
Continuous service (S1) at maximum declared centrifugal force and electric power. Intermittent services are also possible, for detailed information contact our technical assistance office.

Centrifugal force
Range extended to 7930 Kgf. (77.8 KN), with centrifugal force adjustable by hand tools to find better screen performance.

Mechanical protection
Mechanical protection IP66 according to IEC 529, EN 60529.

Protection against mechanical impacts
IK 08 according to IEC 68, EN 50102.

Insulation class
Class F (155°C).

Tropicalization
Standard on all screen vibrators with "drop by drop" trickle system.

Ambient temperature
From -20°C to +60°C.

Vibrator thermal protection
With thermal protector at 130°C for the entire range, or on request with 130°C PTC thermistors (DIN 44081-44082). Thermal protection not installed on MVTX-G series.

Fixing of the vibrator
Typical horizontal.

Lubrication
All vibrators are lubricated in the factory.
Periodic re-lubrication recommended.

Terminal box
Large fixed electrical connections.
The terminal cover, with increased thickness, is designed to contain internal explosions.

Electric motor
Three-phase asynchronous type.
Insulated windings using the "drop by drop" trickle system with Class H resin.
The rotor is die cast aluminum.

Casing
Made in three parts.
Central part in aluminum, external parts in aluminum or spheroidal cast iron.

Bearing flange
In grey cast iron.

4 poles - 1500/1800 rpm

Description				Mechanical specifications								Electrical sp			
Code	Type	SIZE	Certifications	Static moment* kgmm		Centrifugal force kg		Centrifugal force kN		Weight kg		Max input power W		Power rating W	
				50 Hz	60 Hz	50 Hz	60 Hz	50 Hz	60 Hz	50 Hz	60 Hz	50 Hz	60 Hz	50 Hz	60 Hz
three-phase															
601573	**MVTX 15/3500-G/D**	70	• • • •	1369	951	**3450**	**3500**	**33,8**	**34,3**	169	158	2270	2250	1840	1870
601574	**MVTX 15/5000-G/D**	80	• • • •	1990	1387	**5007**	**5023**	**49,1**	**49,3**	235	220	3140	3130	2600	2600
601575	**MVTX 15/7900-G/D**	90	• • • •	3147	2191	**7930**	**7930**	**77,8**	**77,8**	304	289	3650	4000	3212	3520

* Working moment = 2 x static moment.

By the MVTX series is derived the MVTX-G series: specifically designed for use in a potentially explosive gas atmosphere, they are commonly used on oil and gas drilling rigs. The MVT series is also available for use in standard locations, without a potentially explosive atmosphere.

		series MVTX	series MVTX-G
Approvals	c UL us	Class I, Groups CD Class II, Groups EFG Oper. Temp. T4 (135°C) (Amb. Temp.-20°C ÷ +40°C)	Class I, Groups CD Oper. Temp. T3 (200°C) (Amb. Temp. -20°C ÷ +60°C)
	Ex	ATEX II 2 GD Ex d IIB 105°C Gb Ex tb IIIC T105°C Db (Amb. Temp. -20°C ÷ +40°C)	ATEX II 2 G Ex d IIB 150°C Gb (Amb. Temp. -20°C ÷ +60°C)
	IECEx	Ex d IIB T105°C Gb Ex tb IIIC T105°C Db (Amb. Temp. -20°C ÷ +40°C)	Ex d IIB T150°C Gb (Amb. Temp. -20°C ÷ +60°C)

Bearings
Custom made with particular geometry, especially designed for Italvibras, suitable to support both high radial and axial loads.

Motor shaft
Treated steel alloy (Isothermic hardening) resistant to stress.

Eccentric weights
Different eccentric weights can be in accordance with customer requirements.

Weight covers
In aluminum alloy.

Painting
Electrostatic surface treatment based on polymerized epoxy polyester powder in oven at 200°C.
Tested in salt spray for 500 hours.

Certifications

c UL us

Certificate: E129825.
Category: Class I, Groups CD, Class II, Groups EFG
Temperature class: T4 (135°C).
Standards: UL N° 674-886, CSA C22.2

Ex d D

Certificate: DEMKO 12 ATEX 1103487X
Category: II 2 GD Ex d IIB 105°C Gb - Ex tb IIIC T105°C Db. Directive: ATEX 94/9/EC
CENELEC EN 60079-0, 60079-1, 60079-31
Zones of use: 1, 2, 21, 22

IECEx

Certificate of Conformity n° IECEx UL 11.0043X.
Category: Ex d IIB 105°C Gb - Ex tb IIIC T105°C Db
Standards: IEC 60079-0, 60079-1, 60079-31

EAC

Certificate GGTN Permit and Gost-R
Category: Ex d IIB 105°C Gb - DIP A21 IP66 T105°C
Standards GOST R 51330.0-99, GOST-R 51330.1-99, GOST R IEC 61241-1-1-99.

CE

Comply with the applicable European Union directives

Fig. MV

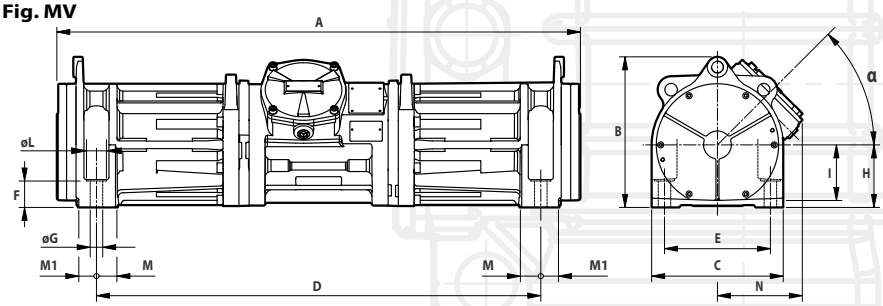

Dimensional specifications (mm)

Max. current A 400 V 50 Hz	Max. current A 460 V 60 Hz	I_A/I_N 50 Hz	I_A/I_N 60 Hz	Type	Fig.	A	B	C	Holes D	Holes E	Holes øG	Holes N°	F	H	I	øL	M	M1	N	α	Cable entry
4,00	3,50	6,50	8,10	**MVTX 15/3500-G/D**	**MV**	1130	325	284	**959**	**228.5**	**27**	**4**	57	135	120	43	44	38	183	45°	NPT 3/4"
5,40	4,85	7,80	9,90	**MVTX 15/5000-G/D**	**MV**	▲	367	284	▲	▲	▲	▲	▲	160	▲	▲	▲	▲	330	45°	NPT 3/4"
6,50	6,20	7,70	8,90	**MVTX 15/7900-G/D**	**MV**	▲	398	330	▲	▲	▲	▲	▲	180	▲	▲	▲	▲	350	30°	NPT 3/4"

I_A/I_N = Ratio between start-up current and maximum current.

▲ Different mounting bolt patterns and different end housing are available. Please contact sales office at Italvibras.

MICRO

The MICRO series has been designed for continual industrial service in processes where a reduced centrifugal force and reduced overall vibrator size are required.
MICRO vibrators are used in many applications in feeding, transport, screening, sizing, separation processes, compaction in the automatic machines used in the chemical industry, food industry, pharmaceuticals, packaging and automation in general.
The MICRO series has been conceived to guarantee higher performance in all conditions and environments and complies with the most recent IEC and EN international standards for use in atmospheres with potentially explosive powders. In particular, the MICRO series can be used in area 22.

Technical features

Power supply
Three-phase voltage from 24V to 480V (except M3/4), 50Hz or 60Hz or single phase 110-130V, 220-240V and 24V, 50/60Hz (in the standard single-phase version, the capacitor is already included in a case along the power supply cable); suitable for use with an inverter from 20 to 60Hz to the base frequency with constant torque load profile.

Polarity
2 poles.

Conformity with European Directives
Low Voltage 2006/95/EC, ATEX 94/9/EC.

Reference Regulations
IEC/EN 61241-0, IEC/EN 61241-1, EN 60034-1.

Functioning
Continual service (S1) at maximum declared centrifugal force and electric power. Intermittent services are also possible depending on the type of vibrator and the operating conditions. For detailed information contact our technical assistance office.

Centrifugal force
Range extended to 65 Kgf. (638N), with centrifugal force adjustable from 0 to 100%.

Mechanical protection
IP 65 according to IEC 529, EN 60529.

Insulation class
Class F (155°C).

Tropicalization
Standard on all vibrators.

Ambient temperature
From -20°C to +40°C.

Fixing of the vibrator
In all positions and therefore without restriction.

Lubrication
Sealed ball bearings, lubricated "for life".

Electric motor
Three-phase and single-phase asynchronous type. The M3/4 model can only be supplied in the single-phase version and does not require a capacitor. Models M3/20 and M3/45 can be supplied both in three-phase and single-phase versions. The capacitor is already included in a case along the power supply cable.

Casing
In high-tensile light aluminium alloy with polished surface.

Eccentric weights
Thin plate-type, allow step-by-step adjustment through variation of the number of weights mounted or their rotation.

Weight covers
In stainless steel AISI 304.

	Description				Mechanical specifications								Electrical specifications			
							Centrifugal force				Weight		Max input power	Max. current A		
					rpm		kg		N		kg		W	380/480 V 50/60 Hz		
	Code	Type	CSA	II3D Temp. class	50 Hz	60 Hz	50 Hz	60 Hz	50 Hz	60 Hz	50 Hz	60 Hz	50 Hz			Type
three phase	600449	**M3/20-S02**	□	100°C	2.0	2.0	**20**	**29**	196	284	1.97	1.97	35	0.15		**M3/20-S02**
three phase	600450	**M3/45-S02**	□	100°C	4.5	4.5	**45**	**65**	441	638	2.20	2.20	45	0.16		**M3/45-S02**
														220/240 V 50/60 Hz	110/115 V 50/60 Hz	
single-phase	600448	**M3/4-S02**	□	100°C	0.4	0.4	**4**	**6**	39	59	0.92	0.92	24	0.13	0.30	**M3/4-S02**
single-phase	600449	**M3/20-S02**	□	100°C	2.0	2.0	**20**	**29**	196	284	1.97	1.97	35	0.17	0.42	**M3/20-S02**
single-phase	600450	**M3/45-S02**	□	100°C	4.5	4.5	**45**	**65**	441	638	2.20	2.20	45	0.20	0.46	**M3/45-S02**

□ The CSA version can be supplied on request and does not envision supply of the capacitor.

Category: II 3 D

Level of protection: Ex tc IIIC T100°C Dc IP65

Temperature class: T 100°C

Zone of use: 22

Other features

All Micro series standard models are supplied with a power supply cable (2 metres for M3/20-S02 and M3/45-S02, 1 metre for M3/4-S02) and, in the models requiring it, a capacitor inserted into a special enclosure in-line with the cable. CSA certification can be supplied on request and the supplied product is not equipped with a capacitor (neither along the cable nor in other positions), therefore the user must install one as per Standard.

Certification

(Available on request)

Regulation CAN/CSA - C22.2 N. 100-95, file n° LR100948 Class 4211 01 – Motors and generators.

Certificate GOST-R standards GOST 16264.1-85, GOST 16264.0-85

II 3D, Ex tc IIIC T100°C Dc IP65, EN 60079-31

Comply with the applicable European Union directives

Fig. N

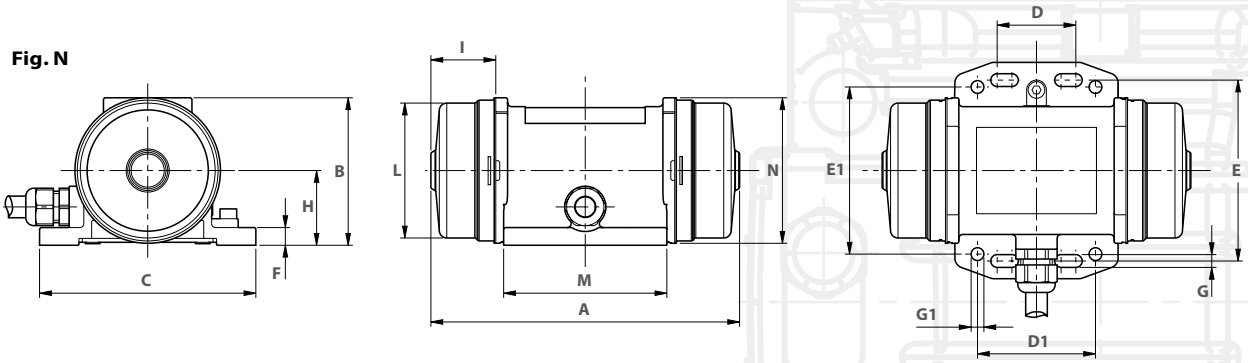

Dimensional specifications (mm)

Fig.	A	B	C	D	D1	E	E1	F	G	Fori øG1	Fori N°	H	I	L	M	N	Cable entry thread
N	157	75	110	**25-40**	**60**	**92**	**85**	**9**	**6.5**	**6.5**	**8**	38	33	69	83	74	M16x1.5
N	172	75	110	**25-40**	**60**	**92**	**85**	**9**	**6.5**	**6.5**	**8**	38	40.5	69	83	74	M16x1.5
N	113	66.5	90	**25-40**	**-**	**75**	**-**	**9**	**5.5**	**-**	**4**	34	25	60	59	65	M12x1.5
N	157	75	110	**25-40**	**60**	**92**	**85**	**9**	**6.5**	**6.5**	**8**	38	33	69	83	74	M16x1.5
N	172	75	110	**25-40**	**60**	**92**	**85**	**9**	**6.5**	**6.5**	**8**	38	40.5	69	83	74	M16x1.5

M3

Designed for industrial continuous duty, the M3 series features a compact shape, reduced overall dimensions, terminal box underneath which means also a high electric protection in dusty environments. Multi-holes mounting feet enable M3 series to match several existing mounting plates. M3 series motors comply with the most recent international standards for use in explosive dust atmospheres. Particularly M3 series can be used in zones 21 and 22.

Technical features

Power supply
Three-phase voltage from 24V to 690V, 50Hz o 60Hz or single-phase 100-130V, 60Hz and 200-240V, 50Hz; suitable for use with an inverter from 20Hz to the base frequency with constant torque load profile.

Polarity
2 and 4 poles.

Conformity with European Directives
ATEX 94/9/EC.
Low Voltage 2006/95/EC.

Reference Regulations
IEC/EN 61241-0, IEC/EN 61241-1, EN 60034-1.

Functioning
Continual service (S1) at maximum declared centrifugal force and electric power. Intermittent services are also possible depending on the type of vibrator and the operating conditions. For detailed information contact our technical assistance office.

Centrifugal force
Range up to 311 kgf (3.05 kN). Centrifugal force can be changed by adjusting the eccenctric weights

Mechanical protection
IP 66 according to IEC 529, EN 60529.

Protection against mechanical impacts
IK 08 according to IEC 68, EN 50102.

Insulation class
Class F (155°C).

Tropicalization
Standard with vacuum encapsulation.

Ambient temperature
From -20°C to +40°C. Versions for higher or lower temperatures are available on request.

Vibrator thermal protection
On request with PTC thermistor rated heat detectors 130°C (DIN 44081-44082).

Fixing of the vibrator
In all positions and therefore without restriction. The terminal box is positioned underneath the vibrator, on the same side as the fixing base.

Lubrication
Sealed ball bearings, lubricated “for life”.

Terminal box
The terminal box is positioned underneath the vibrator, on the same side as the fixing base. Special shaped terminals allow to fix the power supply cable, protecting it from loosening.

Electric motor
Three-phase or single-phase asynchronous type. Insulated windings using vacuum encapsulating.
The rotor is die cast aluminium.

Category: II 2 D

Level of protection: tD A21 IP66

Temperature class: 120°C

EC certificate: LCIE 05 ATEX 6163 X

Zones of use: 21, 22

Casing
In high-tensile aluminium alloy, with sand blasted surface.

Bearing flange
In ductile cast iron.
The geometry of the flange transmits the load to the casing uniformly.

Motor shaft
In treated steel alloy (Isothermic hardening) resistant to stress.

Eccentric weights
Easily adjustable from 100% down to 0.

Weight covers
Made in die cast, high strength allumi-nium alloy with accurate surface sand blasting.

Certifications

Regulation CAN/CSA - C22.2 N. 100-95,
file n° LR100948 Class 4211 01
– Motors and generators.

Certificate of Conformity
n° IECEx CES 09.0001X
standards IEC 61241-0, IEC 61241-1.

Mechanical protection IP66 (EN 60529),
protection against impacts IK 08
(EN 50102)

Comply with the applicable
European Union directives

II 2 D, tD A21 IP66
IEC/EN 61241-0, IEC/EN 61241-1
Certificate n. LCIE 05 ATEX 6163X

KOSHA Korea
Certificate n° 11-AVG BO-0359
Ex td A21 IP66

Certificate GOST-R n° POCC IT.AB72.B03026,
standards GOST R 51330.0-99,
GOST R 51330.8-99,
GOST R IEC 61241-1-1-99

M3

2 poles - 3000/3600 rpm

	Description					Mechanical specifications								Electrical specifications					
	Code	Type	SIZE		II2D Temp. class	Static moment* kgmm		Centrifugal force kg		Centrifugal force kN		Weight kg		Max input power W		Max. current A 400 V 50 Hz	Max. current A 460 V 60 Hz	I_A/I_N	
						50 Hz	60 Hz	50 Hz	60 Hz	50 Hz	60 Hz	50 Hz	60 Hz	50 Hz	60 Hz			50 Hz	60 Hz
three-phase	600467	**M3/65-S02**	00	•	120°C	6.43	6.43	**64.7**	**93.1**	**0.635**	**0.913**	4.3	4.3	120	120	0.27	0.23	3.43	3.90
	600465	**M3/105-S02**	00	•	120°C	9.64	9.64	**97.0**	**140**	**0.950**	**1.37**	5.2	5.2	180	180	0.35	0.30	2.68	3.00
	600462	**M3/205-S02**	00	•	120°C	21.0	21.0	**211**	**304**	**2.07**	**2.98**	6.0	6.0	180	180	0.35	0.30	2.68	3.00
	600461	**M3/305-S02**	00	•	120°C	31.0	21.0	**311**	**304**	**3.05**	**2.98**	6.3	6.0	180	180	0.35	0.30	2.68	3.00
																220 V 50 Hz	115 V 60 Hz		
single-phase	600467	**M3/65-S02**	00	•	120°C	6.43	6.43	**64.7**	**93.1**	**0.635**	**0.913**	4.3	4.3	110	110	0.56	1.52	2.24	2.24
	600465	**M3/105-S02**	00	•	120°C	9.64	9.64	**97.0**	**140**	**0.950**	**1.37**	5.2	5.2	165	165	0.75	1.52	1.67	2.24
	600462	**M3/205-S02**	00	•	120°C	21.0	21.0	**211**	**304**	**2.07**	**2.98**	6.0	6.0	165	165	0.75	1.52	1.67	2.24
	600461	**M3/305-S02**	00	•	120°C	31.0	21.0	**311**	**304**	**3.05**	**2.98**	6.3	6.0	165	165	0.75	1.52	1.67	2.24

4 poles - 1500/1800 rpm

	Description					Mechanical specifications								Electrical specifications					
	Code	Type	SIZE		II2D Temp. class	Static moment* kgmm		Centrifugal force kg		Centrifugal force kN		Weight kg		Max input power W		Max. current A 400 V 50 Hz	Max. current A 460 V 60 Hz	I_A/I_N	
						50 Hz	60 Hz	50 Hz	60 Hz	50 Hz	60 Hz	50 Hz	60 Hz	50 Hz	60 Hz			50 Hz	60 Hz
three-phase	601514	**M15/36-S02**	00	•	120°C	12.0	12.0	**30.2**	**43.5**	**0.30**	**0.43**	5.4	5.4	85	95	0.21	0.20	1.78	1.95
	601515	**M15/81-S02**	00	•	120°C	31.0	21.0	**77.9**	**76.1**	**0.76**	**0.75**	6.3	6.0	85	95	0.21	0.20	1.78	1.95
																220 V 50 Hz	115 V 60 Hz		
single-phase	601514	**M15/36-S02**	00	•	120°C	12.0	12.0	**30.2**	**43.5**	**0.30**	**0.43**	5.4	5.4	90	100	0.43	1.00	1.20	1.30
	601515	**M15/81-S02**	00	•	120°C	31.0	21.0	**77.9**	**76.1**	**0.76**	**0.75**	6.3	6.0	90	100	0.43	1.00	1.20	1.30

* Working moment = 2 x static moment. I_A/I_N = ratio between start-up current and maximum current.

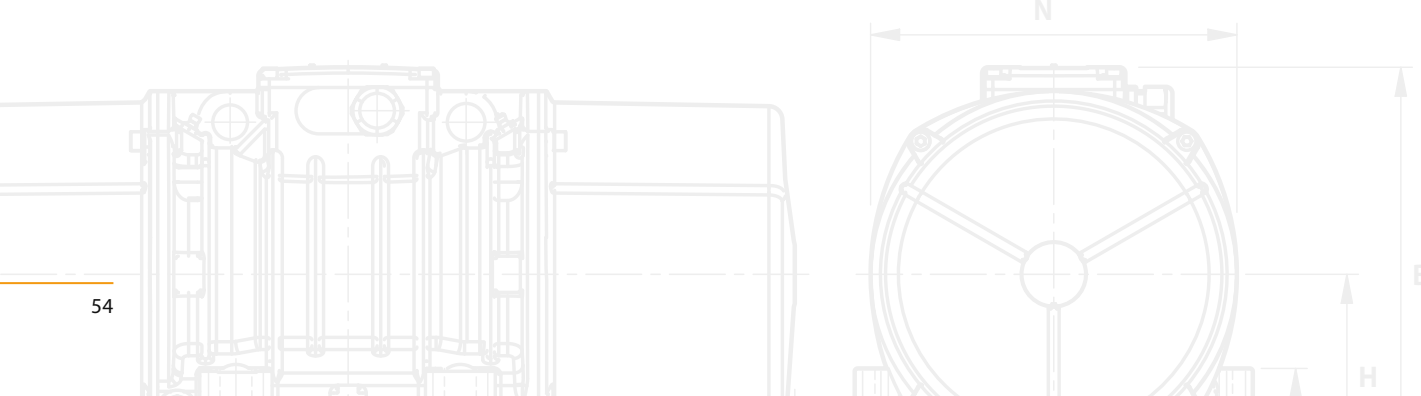

Fig. M1

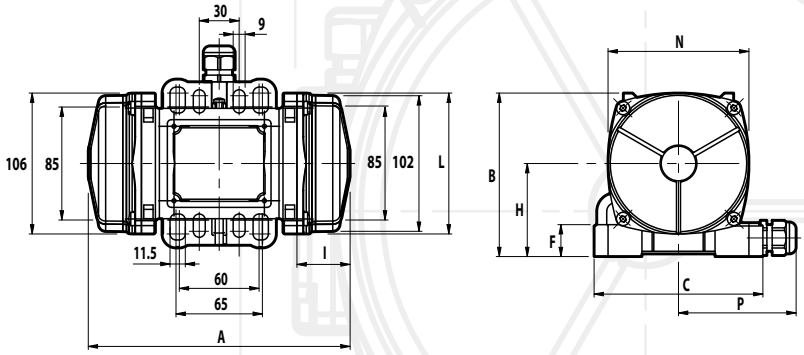

Dimensional specifications (mm)

Type	Fig.	A	B	C	Multi-hole D	Multi-hole E	Holes øG	Holes N°	F	H	I	ØL	M	N	P	Capacitor (µF) 220 V 50 Hz	Capacitor (µF) 115 V 60 Hz	Cable entry thread
M3/65-S02	**M1**	197	123	127	**See drawing**		**9**	**4**	24	70	40	106	86	106	88,5	-	-	M20x1,5
M3/105-S02	**M1**	211									47							
M3/205-S02	**M1**	235									59							
M3/305-S02	**M1**	235									59							
M3/65-S02	**M1**	197	123	127	**See drawing**		**9**	**4**	24	70	40	106	86	106	88,5	10	28	M20x1,5
M3/105-S02	**M1**	211									47							
M3/205-S02	**M1**	235									59							
M3/305-S02	**M1**	235									59							

Dimensional specifications (mm)

Type	Fig.	A	B	C	Multi-hole D	Multi-hole E	Holes øG	Holes N°	F	H	I	ØL	M	N	P	Capacitor (µF) 220 V 50 Hz	Capacitor (µF) 115 V 60 Hz	Cable entry thread
M15/36-S02	**M1**	235	123	127	**See drawing**		**9**	**4**	24	70	59	106	86	106	88.5	-	-	M20x1,5
M15/81-S02	**M1**																	
M15/36-S02	**M1**	235	123	127	**See drawing**		**9**	**4**	24	70	59	106	86	106	88.5	3.15	25	M20x1,5
M15/81-S02	**M1**																	

M3-E

The M3-E is designed for use in industrial processes in environments with a potentially explosive atmosphere, caused by gas and dust, in compliance with ATEX Directive (94/9/EC).
In particular, the M3-E can be used in areas 1 and 2 (gas) and in areas 21 and 22 (dusts) according to the layout and the following features:

Technical features

Power supply
Three-phase voltage 127/220V 50Hz, 200/346V 50Hz, or 210/363V 60 Hz; suitable for use with an inverter from 20Hz to the base frequency with constant torque load profile.

Polarity
2 poles.

Conformity with European Directives
Low Voltage 2006/95/EC, ATEX 94/9/EC.

Reference Regulations
IEC/EN 60079-0, IEC/EN 60079-7, IEC/EN 60079-31, EN 60034-1.

Controls
The components that affect protection are 100% accurately controlled and recorded.

Functioning
Continual service (S1) at maximum declared centrifugal force and electric power. Intermittent services are also possible depending on the type of vibrator and the operating conditions. For detailed information contact our technical assistance office.

Centrifugal force
Range up to 311 kgf (3.05 kN). Centrifugal force can be changed by adjusting the eccenctric weights.

Mechanical protection
IP 66 according to IEC 529, EN 60529.

Protection against mechanical impacts
IK 08 according to IEC 68, EN 50102.

Insulation class
Class F (155°C).

Tropicalization
Standard with vacuum encapsulation.

Ambient temperature
From -20°C to +40°C, on request it is possible to have vibrators for max. ambient temperatures of +55°C.

Vibrator thermal protectIon
On request with PTC thermistor rated heat detectors 130°C (DIN 44081-44082).

Fixing of the vibrator
In all positions and therefore without restriction. The terminal box is positioned underneath the vibrator, on the same side as the fixing base.

Lubrication
Sealed ball bearing, lubricated "for life".

Terminal box
The terminal box is positioned underneath the vibrator, on the same side as the fixing base. Special shaped terminals allow to fix the power supply cable, protecting it from loosening.

Electric motor
Three-phase asynchronous type. Insulated windings using vacuum encapsulating. The rotor is die cast aluminium.

2 poles - 3000/3600 rpm

	Description			Mechanical specifications								Electrical specifications									
	Code	Type	SIZE	Static moment* kgmm		Centrifugal force kg		Centrifugal force kN		Weight kg		Temp. class (G)	Temp. class (D)	Max input power W		Power rating W		Max. current A		t_E (s)	
				50 Hz	60 Hz	50 Hz	60 Hz	50 Hz	60 Hz	50 Hz	60 Hz			50 Hz	60 Hz	50 Hz	60 Hz	400 V 50 Hz	460 V 60 Hz		
three-phase	6E0467	**M3/65-E-S02**	00	6.43	6.43	**64.7**	**93.1**	**0.635**	**0.913**	4.3	4.3	T4	120°C	105	105	80	80	0.30	0.29	20	
	6E0465	**M3/105-E-S02**	00	9.64	9.64	**97.0**	**140**	**0.950**	**1.37**	5.2	5.2										
	6E0462	**M3/205-E-S02**	00	21.0	21.0	**211**	**304**	**2.07**	**2.98**	6.0	6.0										
	6E0461	**M3/305-E-S02**	00	31.0	21.0	**311**	**304**	**3.05**	**2.98**	6.3	6.0										

* Working moment = 2 x static moment. t_E (s) = set time t_E from IEC/EN 60079-7.

Category: II 2 G,D

Level of protection: Ex e IIC T3/T4 Gb,
Ex tb IIIC T120°C Db

Temperature class: Gas: T4 (135°C) Dusts: 120°C

EC certificate: LCIE 06 ATEX 6092 X

Zones of use: 1, 2, 21, 22

Casing
In high-tensile aluminium alloy, with sand-blasted surface.

Bearing flange
In ductile cast iron. The geometry of the flange transmits the load to the casing uniformly.

Motor shaft
In treated steel alloy (Isothermic hardening) resistant to stress.

Eccentric weights
Easily adjustable from 100% down to 0.

Weight covers
Made in die cast, high strength alluminum alloy with accurate surface sand blasting.

Other features
For the M3-E series, the user must fill the terminal box with suitable silicone, after having performed the connection.

Certifications

II 2 GD - Class Ex e IIC T3/T4 Gb,
Ex tb IIIC T120°C Db. IEC/EN 60079-0,
IEC/EN 60079-7, IEC/EN 60079-31
Certificate n° LCIE 06 ATEX 6092 X

Certificate of Conformity
n° IECEx LCI 10.0003X
following standards IEC 60079-0,
IEC 60079-7, IEC 60079-31

GGTN Permit and Gost-R:
Ex e T3/T4 - DIP A21 IP66
standards GOST R 51330.0-99,
GOST R 51330.8-99,
GOST R IEC 61241-1-1-99.

Comply with the applicable European Union directives: ATEX (94/9/CE), Low Voltage (2006/95/CE).

KOSHA Korea
Certificate n° 11-AV4 BO-0346/7/8/9/50/51
Ex e II T3/T4 - Ex td A21 IP66

Fig. M1

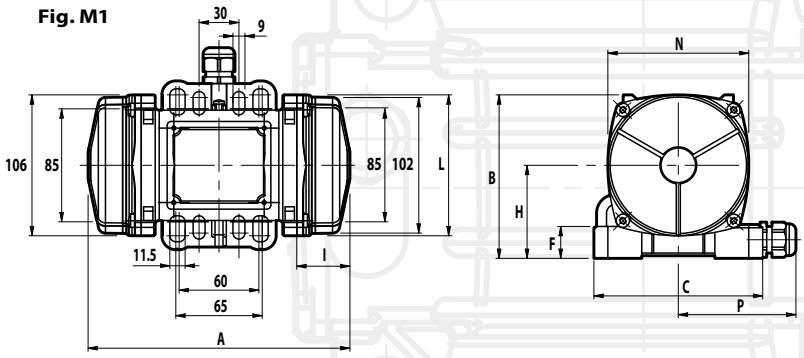

Dimensional specifications (mm)

I_A/I_N	Type	Fig.	A	B	C	Multi-hole D	Multi-hole E	Holes øG	Holes N°	F	H	I	L	M	M	Cable entry thread
3.48	**M3/65-E-S02**	**M1**	197	123	127	**See drawing**		**9**	**4**	24	70	40	106	86	106	M20x1,5
3.68	**M3/105-E-S02**	**M1**	211									47				
3.68	**M3/205-E-S02**	**M1**	235									59				
3.68	**M3/305-E-S02**	**M1**	235									59				

I_A/I_N = ratio between start-up current and maximum current.

MVCC

The MVCC series of vibrators in direct current has been designed for use in those situations where network electricity is not present. In particular for hoppers, silos and gate-controls and roll-on roll-off vehicles (concrete mixers, pumps for concrete, plasterers, salt distributors, gravel spreader, fertiliser spreader, hauled silos, industrial sweeper filters).
The newly-conceived electric motor, with permanent magnet poles, and the increase in size of the electrical parts, allow constant, high yielding performance.
The MF models have a multi-hole fixing base to adapt to different centre distances of drilling.

Technical features

Power supply
In direct current at 12 or 24V.

Conformity with European Directives
Electromagnetic compatibility 2004/108/EC.

Functioning
Continual service (S1) at maximum declared centrifugal force and electric power. Intermittent services are also possible depending on the type of vibrator and our operating conditions.
For detailed information contact our technical assistance office.

Centrifugal force
Range extended up to 1520 Kgf. (14,9 KN), with centrifugal force adjustable from 0 to 100%.

Mechanical protection
IP 66 according to IEC 529, EN 60529.

Protection against mechanical impacts
IK 08 according to IEC 68, EN 50102.

Ambient temperature
From -20°C to +40°C.

Fixing of the vibrator
In all positions and therefore without restriction.

Lubrication
Sealed ball bearings, lubricated "for life".

Terminal box
On MF models it's positioned underneath the vibrator, on the same side as the fixing base.

Electric motor
Direct current with permanent magnet poles. The rotor is a wound brush-type with collector.

Casing
In high-tensile aluminium alloy.

Bearing flange
Constructed in aluminium with steel bearing seat. The geometry of the flange transmits the load to the casing uniformly.

Motor shaft
In treated steel alloy (Isothermic hardening) resistant to stress.

Eccentric weights
Enable continuous adjustment of the centrifugal force. This adjustment is facilitated by a graduated scale that expresses the maximum centrifugal force. A patented system (patent N°MO98A000194) called ARS prevents adjustment errors.

Weight covers
In alluminum alloy for models 3/100-MF, 3/200-MF and 3/500; in AISI 304 stainless steel for models 3/1200 and 3/1500.

	Description		Mechanical specifications					Electrical specifications			
	Code	Type	rpm	Static moment* kgmm	Centrifugal force kg	Centrifugal force kN	Weight kg	Max input power W	Max. current A 12 V	Max. current A 24 V	Fig.
Direct current	600411	**MVCC 3/100-MF**	3000	12.0	**120**	**1.19**	5.0	100	8.0	4.0	**MB**
	600428	**MVCC 3/200-MF**	3000	21.0	**211**	**2.07**	6.0	190	16.0	8.0	**MB**
	600469	**MVCC 3/500**	3000	49.9	**503**	**4.93**	13.1	270	22.5	11.3	**A**
	600405	**MVCC 3/1200**	3600	78.0	**1130**	**11.1**	20.8	530	-	22.0	**A**
	600464	**MVCC 3/1500**	3600	105	**1520**	**14.9**	21.5	530	-	22.0	**A**

* Working moment = 2 x static moment.

Painting
Electrostatic surface treatment based on polymerised epoxy polyester powder in oven at 200°C. Tested in salt spray for 500 hours.

Other features
All MVCC electric vibrators have been tested in semi-anechoic chamber to verify conformity with the standards and directives on electromagnetic compatibility. The MVCC series is supplied with a special high-resistance synthetic rubber power supply cable measuring 2.5 m.

Certifications

Mechanical protection IP66 (EN 60529), protection against impacts IK 08 (EN 50102)

Comply with the applicable European Union directives

Certificate GOST-R standards GOST 16264.1-85, GOST 16264.0-85

Fig. A

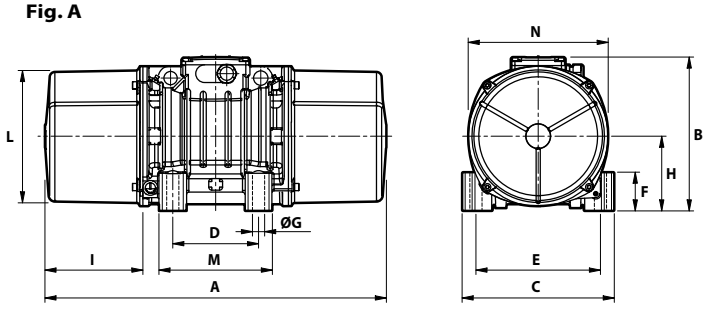

Fig. MB

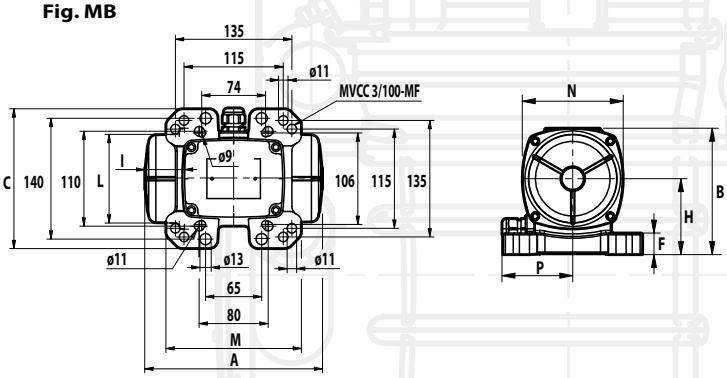

Dimensional specifications (mm)

A	B	C	D	E	Holes øG	N°	F	H	I	L	M	N	P	Cable entry thread
210	146.5	162	See drawing MB			4	25	88	46	103	157	117	82	M20x1.5
267	146.5	162	See drawing MB			4	25	88	46	103	140	117	82	M20x1.5
288	203	167	105	140	13	4	30	82.5	65	145	140	160	-	M25x1.5
308	214.5	205	120	170	17	4	45	93.5	63	168	160	182	-	M25x1.5
308	214.5	205	120	170	17	4	45	93.5	63	168	160	182	-	M25x1.5

** Slot.

MTF

The new MTF (MTF-S02) series, made up of vertical vibrators with lateral flange and with weight protection covers fixed to the opposite part to the flange, adopts innovative technical solutions that increase performance and reliability. Typically used in circular screens and in small and medium-size sieves, these vibrators are supplied with lamellar or clamped eccentric weights, which regulation is particularly easy.
The MTF series complies with the most recent IEC and EN international standards for use in atmospheres with potentially explosive powders. In particular, the MTF series can be used in areas 21 and 22.

Technical features

Power supply
Three-phase voltage from 24V to 690V, 50Hz or 60Hz or single-phase 100-130V, 60Hz and 200-240V, 50Hz (single-phase types are supplied without capacitor); suitable for use with an inverter from 20Hz to the base frequency with constant torque load profile.

Polarity
2 or 4 poles.

Conformity with European Directives
Low Voltage 2006/95/EC,
ATEX 94/9/EC.

Reference Regulations
EN 60034-1,
IEC/EN 61241-0, IEC/EN 61241-1

Functioning
Continual service (S1) at maximum declared centrifugal force and electric power. Intermittent services are also possible depending on the type of vibrator and the operating conditions. For detailed information, contact our technical assistance office.

Centrifugal force
Range extended up to 2615 Kgf. (25.7 KN), with centrifugal force adjustable from 0 to 100%.

Mechanical protection
IP 66 according to IEC 529, EN 60529.
Mechanical protection is ensured in the mounting phase of the vibrator onto the vibrating machine, by introducing the special seal into the seat on the coupling flange.

Protection against mechanical impacts
IK 08 according to IEC 68, EN 50102.

Insulation class
Class F (155°C), class H (180°C) on request.

Tropicalization
Standard on all vibrators, with vacuum encapsulation up to size 30, with "drop by drop" trickle system for larger sizes.

Ambient temperature
From -20°C to +40°C. Versions for higher or lower temperatures are available on request.

Vibrator thermal protection
On demand with PTC rated thermistor heat detectors 130°C (DIN 44081-44082). Also on request thermistors with different temperatures and anti-condensation heaters.

Fixing of the vibrator
In all positions and therefore without restriction.

Lubrication
All vibrators are lubricated in the factory and do not require further lubrication if used in normal operating conditions ("FOR LIFE" lubrication).
In heavy duty operating conditions periodical re-lubrication may be applied to frame sizes 40-50-70.

Electrical connection box
The size guarantees passage of tools used for fixing the vibrator to the vibrating machine. The electrical connection must be carried out using the relative connectors inserted inside the connection box. Special shaped terminals allow to fix the power supply cable, protecting it from loosening.

Electric motor
Three-phase asynchronous type. Designed for maximum starting torques and torque curves specific to requirements of vibrating machines. Insulated windings through vacuum encapsulating up to size 30; using "drop by drop" trickle system with class H resin for sizes 40-50-70. The rotor is die cast aluminium.

Casing
In high-tensile aluminium alloy up to size 50, in spheroidal cast iron for size 70.

Bearing flange
Constructed in cast iron (spheroidal or grey) or in aluminium with steel bearing seat. The geometry of the flange transmits the load to the casing uniformly.

Category: II 2 D

Level of protection: tD A21 IP66

Temperature class: see tab. pages 62-63

EC certificate: LCIE 05 ATEX 6163 X

Zones of use: 21, 22

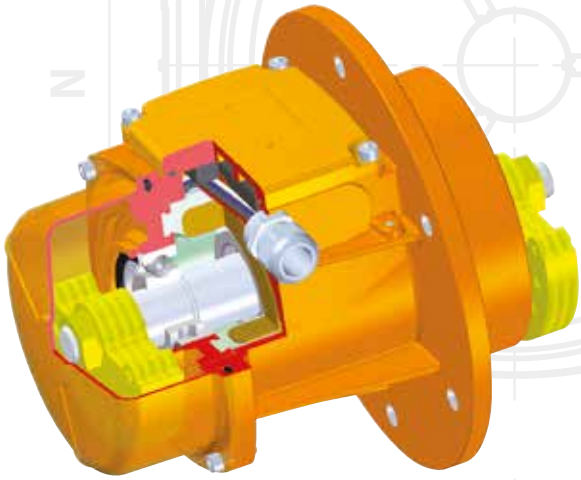

Bearings
The lower and upper bearings have been studied to support the relative load and therefore they have a particular geometry, especially designed and made for Italvibras.

Motor shaft
In treated steel alloy (Isothermic hardening) resistant to stress.

Eccentric weights
Allow greater adjustment of the centrifugal force, with phase shift of the lower weight assembly with respect to the upper group. This adjustment is eased by a graduated scale, which expresses the centrifugal force as a percentage of the maximum centrifugal force.

Weight covers
In aluminium alloy, mounted only on the lower side. The flange side does not have weight cover. Size 40 is supplied without weights covers on both sides.

Painting
Electrostatic surface treatment based on polymerised epoxy polyester powder in oven at 200°C. Tested in salt spray for 500 hours.

Stainless steel protection
On request, corrosion high grade protection (stainless steel micro suspensions in a polyurethanic paint) is available.

Certifications

Regulation CAN/CSA - C22.2 N. 100-95,
file n° LR100948 Class 4211 01
– Motors and generators.

Certificate of Conformity
n° IECEx CES 09.0001X
following standards IEC 61241-0, IEC 61241-1.

Mechanical protection IP66 (EN 60529),
protection against impacts IK 08
(EN 50102)

Comply with the applicable
European Union directives

II 2 D, tD A21 IP66
IEC/EN 61241-0, IEC/EN 61241-1
Certificate n. LCIE 05 ATEX 6163 X

KOSHA Korea
Certificate n° 11-AVG BO-0359
Ex td A21 IP66

Certificate GOST-R n° POCC IT.AB72.
B03026, standards GOST R 51330.0-99,
GOST R 51330.8-99,
GOST R IEC 61241-1-1-99

Upon request available version MTF-C
Class I, Div. 2, Groups ABCD
Standards CAN/CSA-C22.2

MTF

2 poles - 3000/3600 rpm

	Description					Mechanical specifications						Electrical specifications					
						Centrifugal force (A/B)*				Weight		Max input power		Max. current A		I_A/I_N	
						kg		kN		kg		W					
	Code	Type	SIZE		II2D Temp. class	50 Hz	60 Hz	50 Hz	60 Hz	50 Hz	60 Hz	50 Hz	60 Hz	400 V 50 Hz	460 V 60 Hz	50 Hz	60 Hz
three-phase	600375	**MTF 3/65-S02**	00	-	120°C	**31/31**	**44/44**	**0.30/0.30**	**0.43/0.43**	5.40	5.40	120	120	0.27	0.23	3.43	3.90
	600369	**MTF 3/200-S02**	01	•	120°C	**106/75**	**109/109**	**1.04/0.74**	**1.07/1.07**	7.50	7.30	180	180	0.35	0.30	2.68	3.00
	600370	**MTF 3/300-S02**	10	•	120°C	**151/103**	**148/148**	**1.48/1.01**	**1.45/1.45**	11.2	10.9	260	270	0.60	0.50	3.47	4.20
	600378	**MTF 3/500-S02**	20	•	120°C	**251/163**	**235/235**	**2.46/1.60**	**2.30/2.30**	15.0	14.1	450	500	0.80	0.75	4.21	4.80
	600456	**MTF 3/650-S02**	20	•	120°C	**393/251**	**377/235**	**3.85/2.46**	**3.70/2.30**	15.2	14.3	450	500	0.80	0.75	4.21	4.80
	600380	**MTF 3/800-S02**	30	•	120°C	**393/262**	**377/377**	**3.85/2.57**	**3.70/3.70**	17.0	16.5	650	685	1.10	1.00	3.83	6.00
	600285	**MTF 3/1100-S90 Δ**	40	-	120°C	**590/590**	**566/566**	**5.79/5.79**	**5.55/5.55**	26.0	25.0	940	1130	1.70	1.60	6.79	7.00
														220 V 50 Hz	115 V 60 Hz		
single-phase	600375	**MTF 3/65-S02**	00	-	120°C	**31/31**	**44/44**	**0.30/0.30**	**0.43/0.43**	5.40	5.40	110	110	0.56	1.52	2.24	2.24
	600369	**MTF 3/200-S02**	01	-	120°C	**106/75**	**109/109**	**1.04/0.74**	**1.07/1.07**	7.50	7.30	165	165	0.75	1.52	1.67	2.24
	600370	**MTF 3/300-S02**	10	-	120°C	**151/103**	**148/148**	**1.48/1.01**	**1.45/1.45**	11.2	10.9	280	280	1.25	2.40	2.48	3.52
	600378	**MTF 3/500-S02**	20	-	120°C	**251/163**	**235/235**	**2.46/1.60**	**2.30/2.30**	15.0	14.1	500	500	2.30	4.50	3.35	4.22
	600456	**MTF 3/650-S02**	20	-	120°C	**393/251**	**377/235**	**3.85/2.46**	**3.70/2.30**	15.2	14.3	500	500	2.30	4.50	3.35	4.22
	600380	**MTF 3/800-S02**	30	-	120°C	**393/262**	**377/377**	**3.70/2.57**	**5.55/5.55**	17.0	16.5	700	750	3.25	7.00	4.00	4.14

4 poles - 1500/1800 rpm

	Description					Mechanical specifications						Electrical specifications					
						Centrifugal force (A/B)*				Weight		Max input power		Max. current A		I_A/I_N	
						kg		kN		kg		W					
	Code	Type	SIZE		II2D Temp. class	50 Hz	60 Hz	50 Hz	60 Hz	50 Hz	60 Hz	50 Hz	60 Hz	400 V 50 Hz	460 V 60 Hz	50 Hz	60 Hz
three-phase	601446	**MTF 15/80-S02**	01	•	120°C	**39/39**	**38/38**	**0.38/0.38**	**0.37/0.37**	6.8	6.5	85	95	0.21	0.20	1.78	1.95
	601403	**MTF 15/200-S02**	10	•	120°C	**106/74**	**107/107**	**1.04/0.72**	**1.05/1.05**	14.0	13.2	170	170	0.41	0.40	2.34	2.75
	601405	**MTF 15/400-S02**	20	•	120°C	**205/142**	**205/205**	**2.01/1.39**	**2.01/2.01**	20.6	19.8	300	350	0.60	0.60	3.33	3.50
	601406	**MTF 15/550-S02**	20	•	120°C	**276/205**	**295/295**	**2.70/2.01**	**2.70/2.70**	22.0	20.6	300	350	0.60	0.60	3.33	3.50
	601407	**MTF 15/700-S02**	30	•	120°C	**360/263**	**380/380**	**3.53/2.58**	**3.73/3.73**	26.0	24.5	525	665	0.92	0.98	3.48	3.43
	601280	**MTF 15/1100-S90 Δ**	40	-	120°C	**522/522**	**491/491**	**5.12/5.12**	**4.82/4.82**	36.0	31.4	900	1050	1.45	1.50	4.10	4.20
	601379	**MTF 15/1710-S02-VRS**	50	-	150°C	**894/322**	**878/355**	**8.77/3.16**	**8.61/3.48**	44.0	41.5	1100	1200	2.00	1.90	4.29	4.89
	601380	**MTF 15/2000-S02-VRS**	50	-	170°C	**1021/357**	**1017/390**	**10.0/3.50**	**9.98/3.83**	48.0	45.5	1350	1450	2.50	2.30	4.30	4.90
	601381	**MTF 15/3810-S02-VRS**	70	-	135°C	**1908/707**	**1872/718**	**18.7/6.94**	**18.4/7.04**	100	93	2200	2500	3.90	3.90	7.11	6.92
														220 V 50 Hz	115 V 60 Hz		
single-phase	601446	**MTF 15/80-S02**	01	-	120°C	**39/39**	**38/38**	**0.38/0.38**	**0.37/0.37**	6.8	6.5	90	100	0.43	1.00	1.20	1.30
	601403	**MTF 15/200-S02**	10	-	120°C	**106/74**	**107/107**	**1.04/0.72**	**1.05/1.05**	14.0	13.2	210	230	1.00	2.00	1.50	1.85
	601405	**MTF 15/400-S02**	20	-	120°C	**205/142**	**205/205**	**2.01/1.39**	**2.01/2.01**	20.6	19.8	240	320	1.20	2.80	2.50	2.50
	601406	**MTF 15/550-S02**	20	-	120°C	**276/205**	**295/295**	**2.70/2.01**	**2.70/2.70**	22.0	20.6	240	320	1.20	2.80	2.50	2.50
	601407	**MTF 15/700-S02**	30	-	120°C	**360/263**	**380/380**	**3.53/2.58**	**3.73/3.73**	26.0	24.5	450	550	2.15	5.15	5.44	3.63

* Listed as A/B: total centrifugal force is the sum of centrifugal force of top weights (A) and centrifugal force of bottom weights (B).
I_A/I_N = ratio between start-up current and maximum current.

Weight adjustment, see pages 66, 67

Fig. G

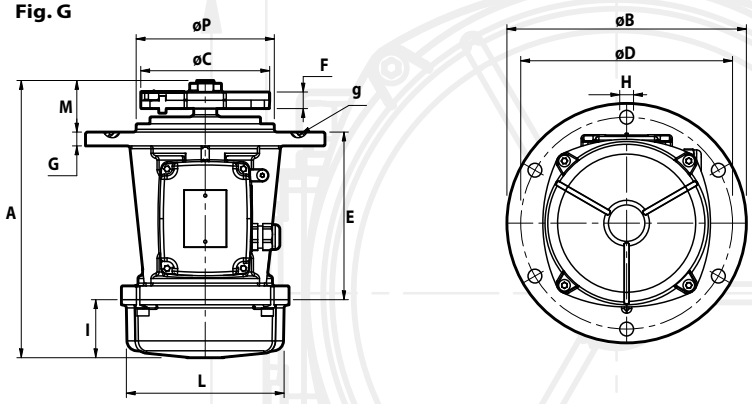

Dimensional specifications (mm)

Type	Fig.	A	øB	øC	Holes øD	Holes øH	Holes N°	E	F	G	I	L	M	øP	Capacitor (µF) 220 V 50 Hz	Capacitor (µF) 115 V 60 Hz	Cable entry thread	Seal g
MTF 3/65-S02	**G**	189	130	86	**109**	**8.5**	**4**	132	7.5	10	36	96	22	-	-	-	M20x1,5	OR 3350
MTF 3/200-S02	**G**	225.5	211.5	92	**188**	**12**	**4**	144	21 (50Hz) 15 (60Hz)	10	58	103	23.5	-	-	-	M20x1,5	OR 4650
MTF 3/300-S02	**G**	247	215	110	**187**	**12**	**4**	179.5	18 (50Hz) 12 (60Hz)	13	54	127	13.5	-	-	-	M20x1,5	OR 4625
MTF 3/500-S02	**G**	279.5	245	122	**205**	**12**	**6**	124	24 (50Hz) 15 (60Hz)	12	65	145	90.5	162	-	-	M25x1,5	OR 4700
MTF 3/650-S02	**G**	279.5	245	150 (50Hz) 132 (60Hz)	**205**	**12**	**6**	124	18	12	65	145	90.5	162	-	-	M25x1,5	OR 4700
MTF 3/800-S02	**G**	301	260	150 (50Hz) 132 (60Hz)	**230**	**15**	**6**	182	18	15	63	170	56	150	-	-	M25x1,5	OR 4800
MTF 3/1100-S90 △	**G**	383	279	145	**254**	**14**	**4**	-	31 (50Hz) 21 (60Hz)	17.5	57.5	-	63	229	-	-	M25x1,5	-

Type	Fig.	A	øB	øC	Holes øD	Holes øH	Holes N°	E	F	G	I	L	M	øP	Capacitor (µF) 220 V 50 Hz	Capacitor (µF) 115 V 60 Hz	Cable entry thread	Seal g
MTF 3/65-S02	**G**	189	130	86	**109**	**8.5**	**4**	132	7.5	10	36	96	22	-	10	28	M20x1,5	OR 3350
MTF 3/200-S02	**G**	225.5	211.5	92	**188**	**12**	**4**	144	21 (50Hz) 15 (60Hz)	10	58	103	23.5	-	10	28	M20x1,5	OR 4650
MTF 3/300-S02	**G**	247	215	110	**187**	**12**	**4**	179.5	18 (50Hz) 12 (60Hz)	13	54	127	13.5	-	16	25	M20x1,5	OR 4625
MTF 3/500-S02	**G**	279.5	245	122	**205**	**12**	**6**	124	24 (50Hz) 15 (60Hz)	12	65	145	90.5	162	12.5	50	M25x1,5	OR 4700
MTF 3/650-S02	**G**	279.5	245	150 (50Hz) 132 (60Hz)	**205**	**12**	**6**	124	18	12	65	145	90.5	162	12.5	50	M25x1,5	OR 4700
MTF 3/800-S02	**G**	301	260	150 (50Hz) 132 (60Hz)	**230**	**15**	**6**	182	18	15	63	170	56	150	25	90	M25x1,5	OR 4800

Dimensional specifications (mm)

Type	Fig.	A	øB	øC	Holes øD	Holes øH	Holes N°	E	F	G	I	L	M	øP	Capacitor (µF) 220 V 50 Hz	Capacitor (µF) 115 V 60 Hz	Cable entry thread	Seal g
MTF 15/80-S02	**G**	225.5	211.5	92	**188**	**12**	**4**	144	31 (50Hz) 21 (60Hz)	10	58	103	23.5	-	-	-	M20x1,5	OR 4650
MTF 15/200-S02	**G**	292.5	215	114 (50Hz) 108 (60Hz)	**187**	**12**	**4**	179.5	48 (50Hz) 40 (60Hz)	13	77	127	36	-	-	-	M20x1,5	OR 4625
MTF 15/400-S02	**G**	335.5	245	130	**205**	**12**	**6**	124	59 (50Hz) 42 (60Hz)	12	93	145	118.5	162	-	-	M25x1,5	OR 4700
MTF 15/550-S02	**G**	376.5	245	130	**205**	**12**	**6**	124	79 (50Hz) 59 (60Hz)	12	114	145	138.5	162	-	-	M25x1,5	OR 4700
MTF 15/700-S02	**G**	380.5	260	154	**230**	**15**	**6**	182	59 (50Hz) 46 (60Hz)	15	106	170	92.5	150	-	-	M25x1,5	OR 4800
MTF 15/1100-S90 △	**G**	426	279	190	**254**	**14**	**4**	-	49	17.5	57.5	-	84.5	229	-	-	M25x1,5	-
MTF 15/1710-S02-VRS	**G**	488	350	190	**290**	**17**	**6**	232	84 (50Hz) 58 (60Hz)	18	134	209	122	172	-	-	M25x1,5	-
MTF 15/2000-S02-VRS	**G**	561	350	190	**290**	**17**	**6**	232	96 (50Hz) 66 (60Hz)	18	171	209	158	172	-	-	M25x1,5	-
MTF 15/3810-S02-VRS	**G**	614	410	250 (50Hz) 244 (60Hz)	**350**	**22**	**6**	310	78 (50Hz) 58 (60Hz)	20	178	280	125.5	234	-	-	M25x1,5	-

Type	Fig.	A	øB	øC	Holes øD	Holes øH	Holes N°	E	F	G	I	L	M	øP	Capacitor (µF) 220 V 50 Hz	Capacitor (µF) 115 V 60 Hz	Cable entry thread	Seal g
MTF 15/80-S02	**G**	225.5	211.5	92	**188**	**12**	**4**	144	31 (50Hz) 21 (60Hz)	10	58	103	23.5	-	3.15	25	M20x1,5	OR 4650
MTF 15/200-S02	**G**	292.5	215	114 (50Hz) 108 (60Hz)	**187**	**12**	**4**	179.5	48 (50Hz) 40 (60Hz)	13	77	127	36	-	5	25	M20x1,5	OR 4625
MTF 15/400-S02	**G**	335.5	245	130	**205**	**12**	**6**	130	59 (50Hz) 42 (60Hz)	12	93	145	118.5	162	32/12 ○	35	M20x1,5	OR 4700
MTF 15/550-S02	**G**	376.5	245	130	**205**	**12**	**6**	130	79 (50Hz) 59 (60Hz)	12	114	145	138.5	162	32/12 ○	40/35 ○	M20x1,5	OR 4700
MTF 15/700-S02	**G**	380.5	260	154	**230**	**15**	**6**	182	59 (50Hz) 46 (60Hz)	15	106	170	92.5	150	96/16 ○	160/40 ○	M25x1,5	OR 4800

△ Supplied without weight covers on both sides ○ Start-up capacitor / *Running capacitor.*

MTF-E

The MTF-E series has been designed for use in industrial processes in environments with a potentially explosive atmosphere, caused by gas and dusts, in compliance with ATEX Directive (94/9/EC).
In particular, the MTF-E series can be used in areas 1 and 2 (gas) and areas 21 and 22 (dusts) according to the layout and following features:

Technical features

Power supply
Three-phase voltage from 220V to 690V, 50Hz or 60Hz; suitable for use with a PWM inverter from 20Hz to the base frequency with constant torque load profile.

Polarity
2 and 4 poles.

Conformity with European Directives
Low Voltage 2006/95/EC,
ATEX 94/9/EC.

Reference Regulations
IEC/EN 60079-0, IEC/EN 60079-7,
IEC/EN 60079-31, EN 60034-1.

Controls
The components that affect protection are 100% accurately controlled and recorded.

Functioning
Continual service (S1) at maximum declared centrifugal force and electric power.

Centrifugal force
Range extended up to 2615 Kgf. (25.7 KN), with centrifugal force adjustable from 0 to 100%.

Mechanical protection
IP 66 according to IEC 529, EN 60529; mechanical protection is ensured in the mounting phase of the vibrator onto the vibrating machine, by introducing the special seal into the seat on the coupling flange.

Protection against thermal protection
IK 08 according to IEC 68, EN 50102.

Insulation class
Class F (155°C).

Tropicalization
Standard on all vibrators, with vacuum encapsulation up to size 30, with "drop by drop" trickle system for larger sizes.

Ambient temperature
From -20°C to +40°C, on request it is possible to have vibrators for max. ambient temperatures of +55°C.

Vibrator thermal protection
On demand with PTC rated thermistor heat detectors 130°C (DIN 44081-44082). Also on request thermistors with different temperatures and anti-condensation heaters.

Fixing of the vibrator
In all positions and therefore without restriction.

Lubrication
All vibrators are lubricated in the factory and do not require further lubrication if used in normal operating conditions. In heavy duty operating conditions periodical re-lubrication may be applied to frame sizes 40-50-70.

Electrical connection box
The size guarantees passage of tools used for fixing the vibrator to the vibrating machine.
The electrical connection must be carried out using the relative connectors inserted inside the connection box.
Special shaped terminals allow to fix the power supply cable, protecting it from loosening.

Electric motor
Three-phase asynchronous type. Designed for maximum starting torques and torque curves adapt for the specific requirements of vibrating machines. Insulated windings using vacuum encapsulating up to size 30; using the "drop by drop" trickle system with class H resin for sizes 40-50-70. The rotor is die cast aluminium.

Casing
In high-tensile aluminium alloy up to size 50, in spheroidal cast iron for size 70.
An external earthing screw is located on the casing as prescribed by Regulation IEC/EN 60079-0

Bearing flange
Constructed in cast iron (ductile or grey) or in aluminium with steel bearing seat. The geometry of the flange transmits the load to the casing uniformly.

Bearings
The lower and upper bearings have been studied to support the relative load and therefore they have a particular geometry, especially designed and made for Italvibras.

Category: II 2 GD

Level of protection: Ex e IIC T3/T4 Gb,
Ex tb IIIC T...°C Db

Temperature class:
Gas: T3 (200°C) or T4 (135°C) Dusts: tab. pages 66-67

EC certificate: LCIE 06 ATEX 6092 X

Zones of use: 1, 2, 21, 22

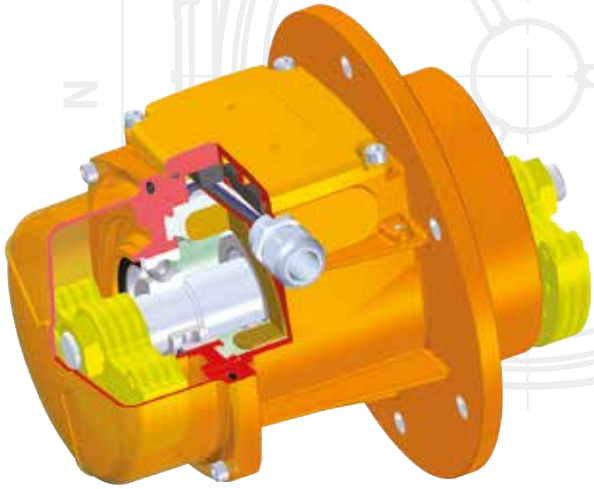

Motor shaft
In treated steel alloy (Isothermic hardening) resistant to stress.

Eccentric weights
Allow greater adjustment of the centrifugal force, with phase shift of the lower weight assembly with respect to the upper group. This adjustment is eased by a graduated scale, which expresses the centrifugal force as a percentage of the maximum centrifugal force.

Weight covers
In aluminium alloy, mounted only on the lower side. The flange side does not have weight cover. Size 40 is supplied without weights covers on both sides.

Painting
Electrostatic surface treatment based on polymerised epoxy polyester powder in oven at 200°C. Tested in salt spray for 500 hours.

Stainless steel protection
On request, corrosion high grade protection (stainless steel AISI 316L micro suspensions in a polyurethanic paint) is available.

Certifications

II 2 GD - Class Ex e IIC T3/T4 Gb,
Ex tb IIIC T...°C Db. IEC/EN 60079-0,
IEC/EN 60079-7, IEC/EN 60079-31,
Certificate n° LCIE 06 ATEX 6092 X

Comply with the applicable
European Union directives: ATEX (94/9/EC),
Low Voltage (2006/95/EC)

GGTN Permit and Gost-R certificate:
Ex e II T3/T4 - DIP A21 IP66
standards GOST R 51330.0-99,
GOST R 51330.8-99, GOST R IEC 61241-1-1-99.

KOSHA Korea
Certificate n° 11-AV4 BO-0346/7/8/9/50/51
Ex e II T3/T4 - Ex td A21 IP66

Certificate of Conformity
n° IECEx LCI 10.0003X
following standards IEC 60079-0,
IEC 60079-7, IEC 60079-31

MTF-E

2 poles - 3000/3600 rpm

	Description			Mechanical specifications						Electrical specifications							
				Centrifugal force (A/B)* kg		Centrifugal force (A/B)* kN		Weight kg		Temp. class (G)	Temp. class (D)	Max input power W		Power rating W		Max. current A 400 V 50 Hz	Max. current A 460 V 60 Hz
	Code	Type	SIZE	50 Hz	60 Hz	50 Hz	60 Hz	50 Hz	60 Hz			50 Hz	60 Hz	50 Hz	60 Hz		
three-phase	6E0369	**MTF 3/200E-S02 O**	01	**106/75**	**109/109**	**1.04/0.74**	**1.07/1.07**	7.50	7.30	T3	120°C	180	180	120	120	0.33	0.33
	6E0370	**MTF 3/300E-S02**	10	**151/153**	**148/148**	**1.48/1.01**	**1.45/1.45**	11.2	10.9	T3 T4	120°C	260 230	270 230	210 172	210 172	0.57 0.48	0.50 0.41
	6E0378	**MTF 3/500E-S02**	20	**251/163**	**235/235**	**2.46/1.60**	**2.30/2.30**	15.0	14.1	T3 T4	120°C	500 350	500 360	300 210	300 210	0.76 0.57	0.67 0.50
	6E0456	**MTF 3/650E-S02**	20	**393/251**	**377/235**	**3.85/2.46**	**3.70/2.30**	15.2	14.3	T3 T4	120°C	500 350	300 360	300 210	300 210	0.76 0.57	0.67 0.50
	6E0380	**MTF 3/800E-S02**	30	**393/262**	**377/377**	**3.85/2.57**	**3.70/3.70**	17.0	16.5	T3 T4	120°C	550 390	570 400	405 290	405 290	0.95 0.72	0.83 0.64
	6E0285	**MTF 3/1100E-S90 Δ**	40	**590/590**	**566/566**	**5.79/5.79**	**5.55/5.55**	26.0	25.0	T4	120°C	830	910	660	660	1.43	1.25

4 poles - 1500/1800 rpm

	Description			Mechanical specifications						Electrical specifications							
				Centrifugal force (A/B)* kg		Centrifugal force (A/B)* kN		Weight kg		Temp. class (G)	Temp. class (D)	Max input power W		Power rating W		Max. current A 400 V 50 Hz	Max. current A 460 V 60 Hz
	Code	Type	SIZE	50 Hz	60 Hz	50 Hz	60 Hz	50 Hz	60 Hz			50 Hz	60 Hz	50 Hz	60 Hz		
three-phase	6E1403	**MTF 15/200E-S02**	10	**106/74**	**107/107**	**1.04/0.72**	**1.05/1.05**	14.0	13.2	T3 T4	120°C	203 170	- 175	90 94	- 95	0.45 0.39	- 0.40
	6E1405	**MTF 15/400E-S02**	20	**205/142**	**205/205**	**2.01/1.39**	**2.01/2.01**	20.6	19.8	T3 T4	120°C	300 285	320 270	200 180	230 200	0.57 0.52	0.52 0.46
	6E1406	**MTF 15/550E-S02**	20	**276/205**	**295/295**	**2.70/2.01**	**2.70/2.70**	22.0	20.6	T3 T4	120°C	300 285	320 270	200 180	230 200	0.57 0.52	0.52 0.46
	6E1407	**MTF 15/700E-S02**	30	**360/263**	**380/380**	**3.53/2.58**	**3.73/3.73**	26.0	24.5	T3 T4	120°C	460 360	500 420	310 240	380 210	0.86 0.72	0.85 0.70
	6E1280	**MTF 15/1100E-S90 Δ**	40	**522/522**	**491/491**	**5.12/5.12**	**4.82/4.82**	36.0	31.4	T3 T4	120°C	900 630	950 700	660 460	730 505	1.38 1.05	1.32 1.00
	6E1379	**MTF 15/1710E-S02-VRS**	50	**894/322**	**878/355**	**8.77/3.16**	**8.61/3.48**	44.0	41.5	T3 T4	150°C	1100 630	1150 700	730 480	800 530	1.90 1.33	1.82 1.27
	6E1380	**MTF 15/2000E-S02-VRS**	50	**1021/357**	**1017/390**	**10.0/3.50**	**9.98/3.83**	48.0	45.5	T3 T4	150°C	1100 630	1150 700	730 480	800 530	1.90 1.33	1.82 1.27
	6E1381	**MTF 15/3810E-S02-VRS**	70	**1908/707**	**1872/718**	**18.7/6.94**	**18.4/7.04**	100	93	T3 T4	135°C	2200 1850	2400 1950	1780 1500	1960 1650	3.71 3.14	3.50 3.00

* Listed as A/B: total centrifugal force is the sum of centrifugal force of top weights (A) and centrifugal force of bottom weights (B).
O Available only in versions 127/220V 50Hz three-phase, 200/346V 50Hz three-phase and 210/363V 60Hz three-phase.

Weight adjustment

Frontal fixing weights

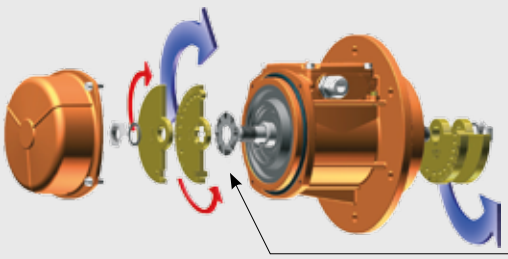

Clamp fixing weights

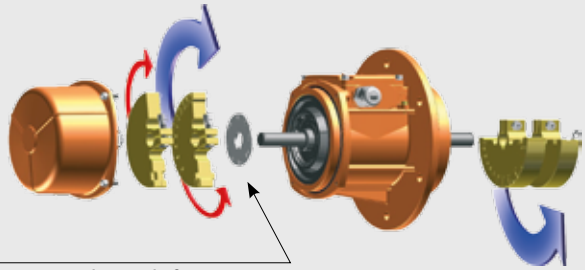

Graduated disks for upper and lower weight group phase shift

Regulation between upper and lower weight groups

Single weight phase shift

				Dimensional specifications (mm)															
							Holes												
t_E (s)	I_A/I_N	Type	Fig.	A	øB	øC	øD	øH	N°	E	F	G	I	L	M	øP	Cable entry thread	Seal g
30	2.68	**MTF 3/200E-S02 O**	G	225.5	211.5	92	**188**	**12**	**4**	144	21 (50Hz) 15 (60Hz)	10	58	103	23.5	-	M20x1,5	OR 4650
18 12	3.50 4.20	**MTF 3/300E-S02**	G	247	215	110	**187**	**12**	**4**	179.5	18 (50Hz) 12 (60Hz)	13	54	127	13.5	-	M20x1,5	OR 4625
12 8	4.20 5.60	**MTF 3/500E-S02**	G	279.5	245	150	**205**	**12**	**6**	124	24 (50Hz) 15 (60Hz)	12	65	145	90.5	162	M25x1,5	OR 4700
12 8	4.20 5.60	**MTF 3/650E-S02**	G	279.5	245	150 (50Hz) 132 (60Hz)	**205**	**12**	**6**	124	18	12	65	145	90.5	162	M25x1,5	OR 4700
12 8	4.20 5.52	**MTF 3/800E-S02**	G	301	260	150 (50Hz) 132 (60Hz)	**230**	**15**	**6**	182	18	15	63	170	56	150	M25x1,5	OR 4800
6	7.30	**MTF 3/1100E-S90 Δ**	G	383	279	145	**254**	**14**	**4**	-	31 (50Hz) 21 (60Hz)	17.5	57.5	-	63	229	M25x1,5	-

				Dimensional specifications (mm)															
							Holes												
t_E (s)	I_A/I_N	Type	Fig.	A	øB	øC	øD	øH	N°	E	F	G	I	L	M	øP	Cable entry thread	Seal g
35 28	2.04 2.34	**MTF 15/200E-S02**	G	292.5	215	114 (50Hz) 108 (60Hz)	**187**	**12**	**4**	179.5	48 (50Hz) 40 (60Hz)	13	77	127	36	-	M20x1,5	OR 4625
18 16	3.33 3.63	**MTF 15/400E-S02**	G	335.5	245	130	**205**	**12**	**6**	124	59 (50Hz) 42 (60Hz)	12	93	145	118.5	162	M25x1,5	OR 4700
18 16	3.33 3.63	**MTF 15/550E-S02**	G	376.5	245	130	**205**	**12**	**6**	124	79 (50Hz) 59 (60Hz)	12	114	145	138.5	162	M25x1,5	OR 4700
17 12	3.50 4.20	**MTF 15/700E-S02**	G	380.5	260	154	**230**	**15**	**6**	182	59 (50Hz) 46 (60Hz)	15	106	170	92.5	150	M25x1,5	OR 4800
13 8	4.00 5.36	**MTF 15/1100E-S90 Δ**	G	426	279	190	**254**	**14**	**4**	-	49	17.5	57.5	-	84.5	229	M25x1,5	-
9 5.5	4.95 7.00	**MTF 15/1710E-S02-VRS**	G	488	350	190	**290**	**17**	**6**	232	84 (50Hz) 58 (60Hz)	18	134	209	122	172	M25x1,5	-
9 5.5	4.95 7.00	**MTF 15/2000E-S02-VRS**	G	561	350	190	**290**	**17**	**6**	232	96 (50Hz) 66 (60Hz)	18	171	209	158	172	M25x1,5	-
6 6	7.17 8.42	**MTF 15/3810E-S02-VRS**	G	614	410	250 (50Hz) 244 (60Hz)	**350**	**22**	**6**	310	78 (50Hz) 58 (60Hz)	20	178	280	125.5	234	M25x1,5	-

Δ Supplied without weight covers on both sides. t_E (s) = set time t_E from IEC/EN 60079-7. I_A/I_N = ratio between start-up current and maximum current.

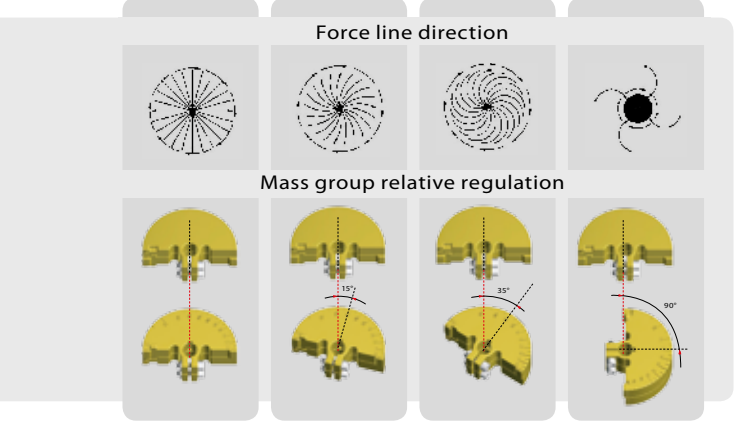

Fig. G

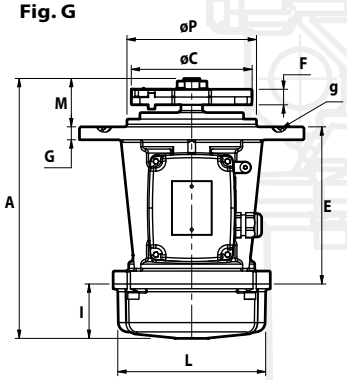

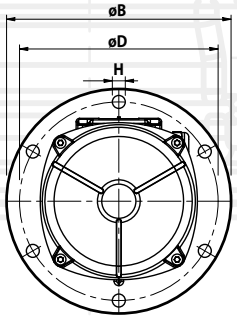

MVB/MVB-FLC

The MVB series is made up of vertical vibrators with lateral flange and shaft projecting on both sides.
The MVB-FLC series is made up of vertical vibrators with central flange and shaft projecting on both sides.
These vibrators are typically used in circular screens and medium-size and large sieves, and can be supplied in 4 different versions: A, B, C, D (see page 70) according to the type of eccentric weights supplied with the vibrator and which must be mounted by the user. Size 50 is only available in B, C and D versions.
The size 50 complies with the most recent IEC and EN international standards for use in atmospheres with potentially explosive powders. In particular, the size 50 series can be used in areas 21 and 22.

Technical features

Power supply
Three-phase voltage from 220V to 690V, 50Hz or 60Hz; suitable for use with an inverter from 20Hz to the base frequency with constant torque load profile.

Polarity
4 poles.

Conformity with European Directives
Low Voltage 2006/95/EC,
ATEX 94/9/EC (only size 50).

Reference Regulations
EN 60034-1, IEC/EN 61241-0, IEC/EN 61241-1

Functioning
Continual service (S1) at maximum declared centrifugal force and electric power. Intermittent services are also possible depending on the type of vibrator and the operating conditions. For detailed information, contact our technical assistance office.

Centrifugal force
Range extended up to 7000 Kgf. (68.7 KN), with centrifugal force adjustable from 0 to 100%.

Mechanical protection
IP 66 according to IEC 529, EN 60529.

Protection against mechanical impacts
IK 08 according to IEC 68, EN 50102.

Insulation class
Class F (155°C), class H (180°C) on request.

Tropicalization
Standard on all vibrators with “drop by drop” trickle system.

Ambient temperature
From -20°C a +40°C. Versions for higher or lower temperatures are available on request.

Vibrator thermal protection
Standard PTC rated thermistor heat detectors 130°C (DIN 44081-44082) from size 80, on request for smaller sizes. Also on request thermistors with different temperatures and anti-condensation heaters.

Fixing of the vibrator
In all positions and therefore without restriction.

Lubrication
All vibrators are lubricated in the factory and do not require further lubrication if used in normal operating conditions (“FOR LIFE” lubrication). In heavy duty operating conditions periodical re-lubrication may be applied.

Terminal box
Large fixed electrical connections. Special shaped terminals allow to fix the power supply cable, protecting it from loosening.

Electric motor
Three-phase asynchronous type. Designed for maximum starting torques and torque curves specific to requirements of vibrating machines. Insulated windings using “drop by drop” trickle system with class H resin. The rotor is die cast aluminium.

Casing
In spheroidal cast iron to have high strength and optimal elasticity.

Bearing flange
Constructed in spheroidal cast iron. The geometry of the flange transmits the load to the casing uniformly.

Bearings
Custom made with particular geometry, especially designed for Italvibras, suitable to support both high radial and axial loads.

Motor shaft
In treated steel alloy (Isothermic hardening) resistant to stress.

Type: MVB SIZE.50, MVB-FLC SIZE.50

Category: II 2 D

Level of protection: tD A21 IP66

Temperature class: 150°C

EC certificate: LCIE 05 ATEX 6163 X

Zones of use: 21, 22

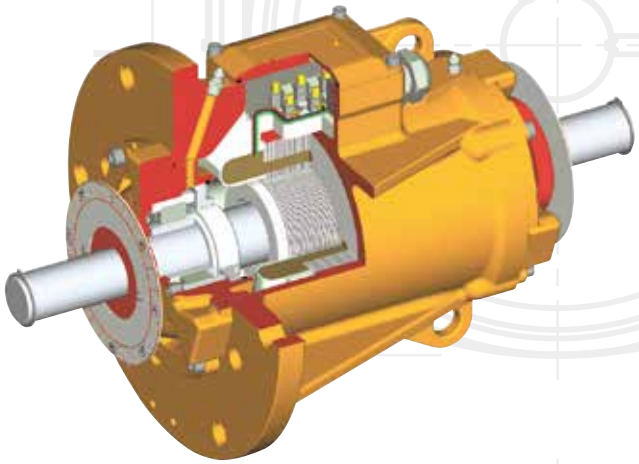

Eccentric weights
The weights are not provided in the delivery and must be ordered separately (ask Italvibras sales office). Lamellar for clamped centric weight have an ample possibility of adjustment: the particular adjustment system adopted allows to obtain phase shift from 0 to 180° of the group of upper weights with respect to the group of lower weights and to have ample adjustment of the centrifugal force within the same group of weights.

Weight covers
Not envisioned in the MVB and MVB-FLC series.

Painting
Electrostatic surface treatment based on polymerised epoxy polyester powder in oven at 200°C. Tested in salt spray for 500 hours.

Stainless steel protection
On request, corrosion high grade protection (stainless steel micro suspensions in a polyurethanic paint) is available.

Certifications

Regulation CAN/CSA - C22.2 N. 100-95, file n° LR100948 Class 4211 01 – Motors and generators.

Certificate of Conformity n° IECEx CES 09.0001X following standards IEC 61241-0, IEC 61241-1.

Mechanical protection IP66 (EN 60529), protection against impacts IK 08 (EN 50102)

Comply with the applicable European Union directives

II 2 D, tD A21 IP66
IEC/EN 61241-0, IEC/EN 61241-1
Certificate n. LCIE 05 ATEX 6163X

KOSHA Korea
Certificate n° 11-AVG BO-0359
Ex td A21 IP66

Certificate GOST-R n° POCC IT.AB72. B03026, standards GOST R 51330.0-99, GOST R 51330.8-99, GOST R IEC 61241-1-1-99

Upon request available version MVB-C / MVB-C-FLC
Class I, Div. 2, Groups ABCD
Standards CAN/CSA-C22.2

MVB/MVB-FLC

MVB 4 poles - 1500/1800 rpm

	Description					Mechanical specifications					Electrical specifications			
						Centrifugal force kg		Centrifugal force kN			Max input power W		Max. current A	
	Code	Type	SIZE		II2D Temp. class	50 Hz	60 Hz	50 Hz	60 Hz	Weight kg	50 Hz	60 Hz	400 V 50 Hz	460 V 60 Hz
three-phase	601226	**MVB 1510/15**	50	•	150°C	**1500**	**1500**	**14.7**	**14.7**	41.5	1100	1200	2.10	2.00
	601129	**MVB 2500/15**	60	•	/	**2500**	**2500**	**24.5**	**24.5**	67.0	2150	2700	3.90	4.10
	601130	**MVB 4500/15**	80	•	/	**4500**	**4500**	**44.1**	**44.1**	106	4000	4200	6.70	5.80
	601131	**MVB 7000/15**	90	•	/	**7000**	**7000**	**68.7**	**68.7**	160	7000	7000	11.8	10.2

MVB-FLC 4 poles - 1500/1800 rpm

	Description					Mechanical specifications					Electrical specifications			
						Centrifugal force kg		Centrifugal force kN			Max input power W		Max. current A	
	Code	Type	SIZE		II2D Temp. class	50 Hz	60 Hz	50 Hz	60 Hz	Weight kg	50 Hz	60 Hz	400 V 50 Hz	460 V 60 Hz
three-phase	601225	**MVB 1510/15-FLC**	50	•	150°C	**1500**	**1500**	**14.7**	**14.7**	54.5	1100	1200	2.10	2.00
	601134	**MVB 2500/15-FLC**	60	•	/	**2500**	**2500**	**24.5**	**24.5**	67.0	2150	2700	3.90	4.10
	601135	**MVB 4500/15-FLC**	80	•	/	**4500**	**4500**	**44.1**	**44.1**	106	4000	4200	6.70	5.80
	601136	**MVB 7000/15-FLC**	90	•	/	**7000**	**7000**	**68.7**	**68.7**	160	7000	7000	11.8	10.2

Versions

Version A

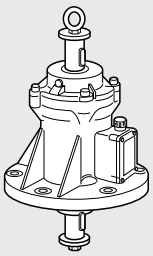

Basic model.

Version B

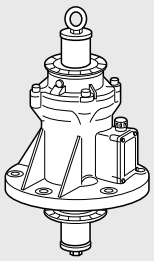

Basic model with angle disc.

Version C

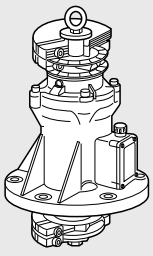

Basic model with angle disc and weights type C (clamped).

Version D

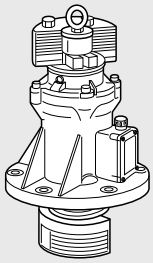

Basic model with angle disc and weights type D (lamellar).

Fig. I

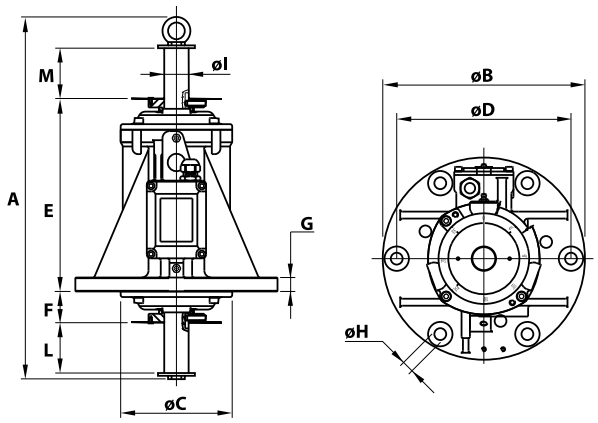

Fig. L

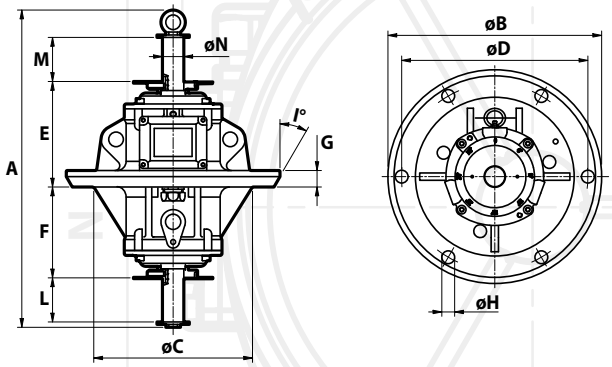

Dimensional specifications (mm)

I_A/I_N 50 Hz	I_A/I_N 60 Hz	Type	Fig.	A	øB	øC	Holes øD	Holes øH	Holes N°	E	F	G	øI	L	M	Cable entry thread
3.76	4.50	**MVB 1510/15**	**I**	476	290	171	**250**	**17**	**6**	278	46	20	35	71	71	M25x1,5
5.60	5.81	**MVB 2500/15**	**I**	587	350	224	**305**	**21**	**6**	294	54	27	40	71	71	M25x1,5
4.48	4.18	**MVB 4500/15**	**I**	664	400	240	**355**	**23.5**	**6**	340	70	30	52	75	75	M25x1,5
6.19	6.73	**MVB 7000/15**	**I**	737	508	314	**438**	**25**	**8**	387	87	34	52	79	79	M25x1,5

Dimensional specifications (mm)

I_A/I_N 50 Hz	I_A/I_N 60 Hz	Type	Fig.	A	øB	øC	Holes øD	Holes øH	Holes N°	E	F	G	I°	L	M	øN	Cable entry thread
3.76	4.50	**MVB 1510/15-FLC**	**L**	476	350	260	**305**	**21**	**6**	174	150	27	30	71	71	35	M25x1,5
5.60	5.81	**MVB 2500/15-FLC**	**L**	587	350	260	**305**	**21**	**6**	189	162	27	30	71	71	40	M25x1,5
4.48	4.18	**MVB 4500/15-FLC**	**L**	664	400	310	**355**	**23.5**	**6**	220	190	30	15	75	75	52	M25x1,5
6.19	6.73	**MVB 7000/15-FLC**	**L**	737	508	348	**438**	**25**	**8**	252.5	221.5	32.5	30	79	79	52	M25x1,5

I_A/I_N = ratio between start-up current and maximum current.

Each C type weight group (in twos) is adjustable by phase shifting one in respect to the other. Each D type weight group (lamellars) is adjustable by removing one or more lamellar elements.

Weight adjustment: the weights at the two ends of the shaft can be staggered as required, with reference to the graduated discs on the shaft itself.

Type "C"

Infinitely adjustable centrifugal force

Type "D"

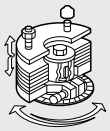

Centrifugal force adjustable from max. to min. by removing the lamellar weights.

MVB-E/MVB-E-FLC

The MVB-E and MVB-E-FLC flanged vibrator series have been designed for use in industrial processes with screens and sieves in environments with a potentially explosive atmosphere, caused by gas and dusts, in compliance with ATEX Directive (94/9/EC).
These vibrators can be supplied in B, C, D versions (see page 70) according to the eccentric weights supplied with the vibrator and to be mounted by the user.
In particular, these vibrators can be used in areas 1 and 2 (gas) and in areas 21 and 22 (dusts) according to the layout and the following features:

Technical features

Power supply
Three-phase voltage from 220V to 690V, 50Hz or 60Hz; suitable for use with a PWM inverter from 20Hz to the base frequency with constant torque load profile.

Polarity
4 poles.

Conformity with European Directives
Low Voltage 2006/95/EC,
ATEX 94/9/EC.

Reference Regulations
IEC/EN 60079-0, IEC/EN 60079-7,
IEC/EN 60079-31, EN 60034-1.

Controls
The components that affect protection are 100% accurately controlled and recorded.

Functioning
Continual service (S1) at maximum declared centrifugal force and electric power.

Centrifugal force
1500 Kgf. (14.7 KN), adjustable with variation of the eccentric weights.

Mechanical protection
IP 66 according to IEC 529, EN 60529.

Protection against mechanical impacts
IK 08 according to IEC 68, EN 50102.

Insulation class
Class F (155°C).

Tropicalization
Standard with "drop by drop" trickle system.

Ambient temperature
From -20°C to +40°C, on request it is possible to have vibrators for max. ambient temperature +55°C.

Vibrator thermal protection
On demand with PTC rated thermistor heat detectors 130°C (DIN 44081-44082). Also on request thermistors with different temperatures and anti-condensation heaters.

Fixing of the vibrator
In all positions and therefore without restriction.

Lubrication
All vibrators are lubricated in the factory and do not require further lubrication if used in normal operating conditions ("FOR LIFE" lubrication). In heavy duty operating conditions periodical re-lubrication may be applied.

Terminal box
Large fixed electrical connections. Special shaped terminals allow to fix the power supply cable, protecting it from loosening.

Electric motor
Three-phase asynchronous type. Insulated windings using "drop by drop" trickle system with class H resin.
The rotor is die cast aluminium.

Casing
In spheroidal cast iron to have high strength and optimal elasticity.
An external earthing screw is located on the casing as prescribed by Regulation IEC/EN 60079-0.

Bearing flange
Constructed in spheroidal cast iron.
The geometry of the flange transmits the load to the casing uniformly.

Bearings
Custom made with particular geometry, especially designed for Italvibras, suitable to support both high radial and axial loads.

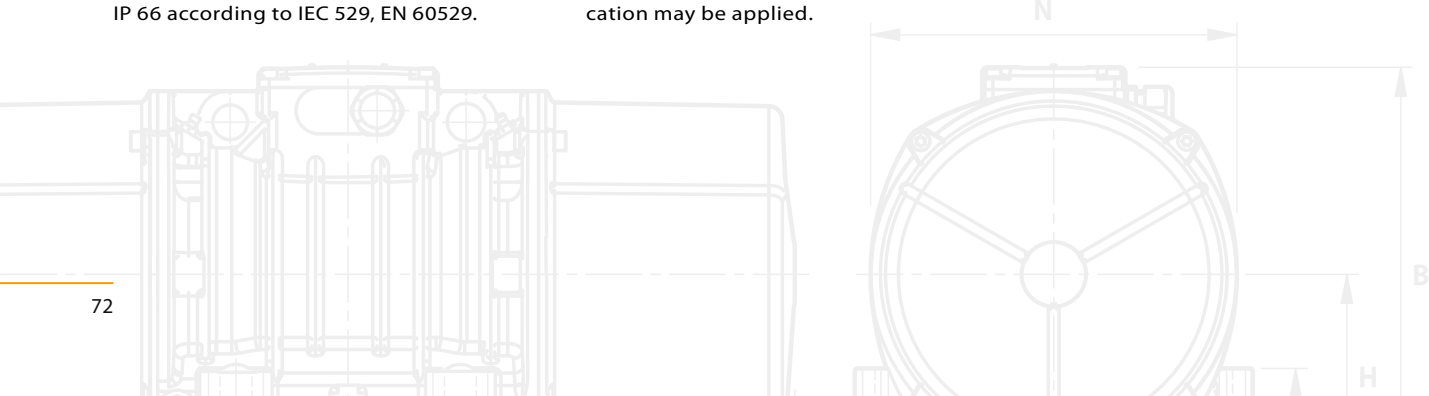

Category: II 2 GD

Level of protection:
Ex e IIC T3/T4 Gb, Ex tb IIIC T150°C Db

Temperature class:
Gas: T3 (200°C) or T4 (135°C) Dusts: 150°C

EC certificate: LCIE 06 ATEX 6092 X

Zones of use: 1, 2, 21, 22

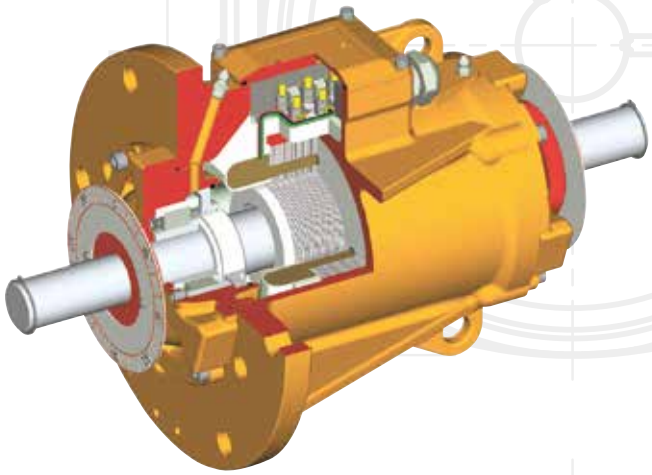

Motor shaft
In treated steel alloy (Isothermic hardening) resistant to stress.

Eccentric weights
The weights are not provided in the delivery and must be ordered separately (ask Italvibras sales office). Lamellar for clamped centric weigh have an ample possibility of adjustment: the particular adjustment system adopted allows to obtain phase shift from 0 to 180° of the group of upper weights with respect to the group of lower weights and to have ample adjustment of the centrifugal force within the same group of weights.

Weight covers
Not envisioned in the MVB-E and MVB-E-FLC series.

Painting
Electrostatic surface treatment based on polymerised epoxy polyester powder in oven at 200°C. Tested in salt spray for 500 hours.

Stainless steel protection
On request, corrosion high grade protection (stainless steel AISI 316L micro suspensions in a polyurethanic paint) is available.

Certifications

II 2 GD - Class Ex e IIC T3/T4 Gb,
Ex tb IIIC T150°C Db. IEC/EN 60079-0,
IEC/EN 60079-7, IEC/EN 60079-31
Certificate n° LCIE 06 ATEX 6092 X

Comply with the applicable
European Union directives: ATEX (94/9/EC),
Low Voltage (2006/95/EC)

GGTN Permit and Gost-R certificate:
Ex e II T3/T4 - DIP A21 IP66
standards GOST R 51330.0-99,
GOST R 51330.8-99, GOST R IEC 61241-1-1-99.

KOSHA Korea
Certificate n° 11-AV4 BO-0346/7/8/9/50/51
Ex e II T3/T4 - Ex td A21 IP66

Certificate of Conformity
n° IECEx LCI 10.0003X
following standards IEC 61241-0,
IEC 61241-1, IEC 60079-0, IEC 60079-7

MVB-E/MVB-E-FLC

MVB-E 4 poles - 1500/1800 rpm

	Description			Mechanical specifications					Electrical specifications							
				Centrifugal force							Max input power W		Power rating W		Max. current A	
	Code	Type	SIZE	kg 50 Hz	kg 60 Hz	kN 50 Hz	kN 60 Hz	Weight kg	Temp. class (G)	Temp. class (D)	50 Hz	60 Hz	50 Hz	60 Hz	400 V 50 Hz	460 V 60 Hz
three-phase	6E1226	**MVB 1510/15-E**	50	**1500**	**1500**	**14.7**	**14.7**	41.5	T3 T4	150°C	1100 630	1150 700	730 480	800 530	1.90 1.33	1.82 1.27

MVB-E-FLC 4 poles - 1500/1800 rpm

	Description			Mechanical specifications					Electrical specifications							
				Centrifugal force							Max input power W		Power rating W		Max. current A	
	Code	Type	SIZE	kg 50 Hz	kg 60 Hz	kN 50 Hz	kN 60 Hz	Weight kg	Temp. class (G)	Temp. class (D)	50 Hz	60 Hz	50 Hz	60 Hz	400 V 50 Hz	460 V 60 Hz
three-phase	6E1225	**MVB 1510/15-E-FLC**	50	**1500**	**1500**	**14.7**	**14.7**	54.5	T3 T4	150°C	1100 630	1150 700	730 480	800 530	1.90 1.33	1.82 1.27

Versions

Version A

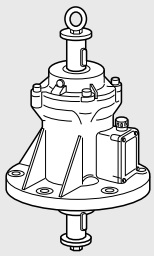

Basic model.

Version B

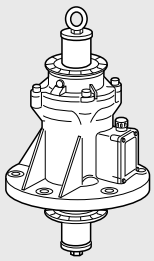

Basic model with angle disc.

Version C

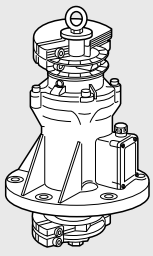

Basic model with angle disc and weights type C (clamped).

Version D

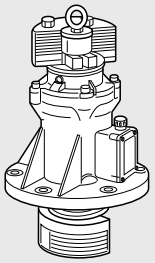

Basic model with angle disc and weights type D (lamellar).

Fig. I

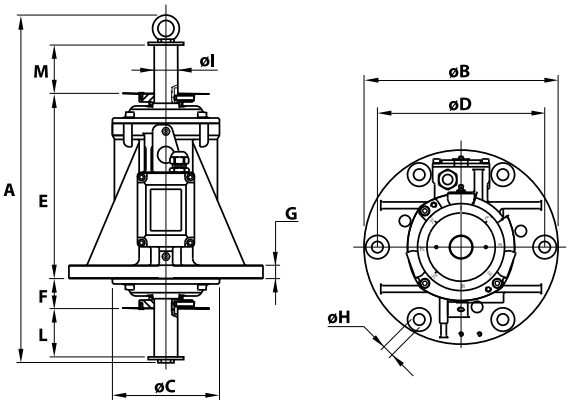

Fig. L

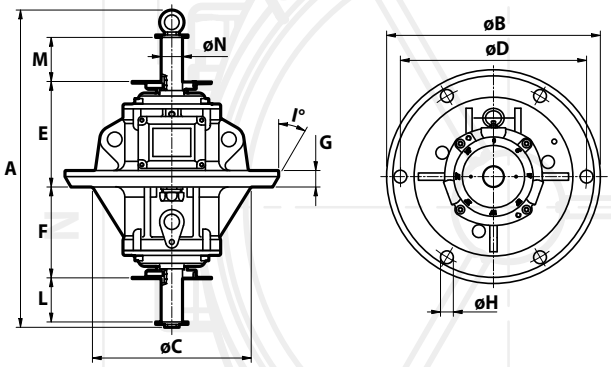

Dimensional specifications (mm)

t_E (s)	I_A/I_N	Type	Fig.	A	øB	øC	øD	Holes øH	N°	E	F	G	øI	L	M	Cable entry thread
9 5.5	4.95 7.00	**MVB 1510/15-E**	**I**	476	290	171	**250**	**17**	**6**	278	46	20	35	71	71	M25x1,5

Dimensional specifications (mm)

t_E (s)	I_A/I_N	Type	Fig.	A	øB	øC	øD	Holes øH	N°	E	F	G	øI	L	M	øN	Cable entry thread
9 5.5	4.95 7.00	**MVB 1510/15-E-FLC**	**L**	476	350	260	**305**	**21**	**6**	174	150	27	30	71	71	35	M25x1,5

t_E (s) = set time t_E from IEC/EN 60079-7. I_A/I_N = ratio between start-up current and maximum current.

Each C type weight group (in twos) is adjustable by phase shifting one in respect to the other. Each D type weight group (lamellars) is adjustable by removing one or more lamellar elements.

Weight adjustment: the weights at the two ends of the shaft can be staggered as required, with reference to the graduated discs on the shaft itself.

Type "C"

Infinitely adjustable centrifugal force

Type "D"

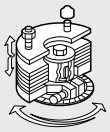

Centrifugal force adjustable from max. to min. by removing the lamellar weights.

VB

The VB series is made up of vertical vibrators with double conical flange. These vibrators are typically used in circular screens and in medium-size and large sieves.
They are supplied without eccentric weights, which must be realised and mounted by the manufacturer of the vibrating machine.
The VB series complies with the most recent IEC and EN international standards for use in atmospheres with potentially explosive powders. In particular, the VB series can be used in areas 21 and 22.

Category: II 2 D

Level of protection: tD A21 IP66

Temperature class: 150°C

EC certificate: LCIE 05 ATEX 6163 X

Zones of use: 21, 22

Technical features

Power supply
Three-phase voltage from 220V to 690V, 50Hz or 60Hz; suitable for use with an inverter from 20Hz to the base frequency with constant torque load profile

Polarity
4 and 6 poles.

Conformity with European Directives
Low voltage 2006/95/EC,
ATEX 94/9/EC.

Reference Regulations
EN 60034-1,
IEC/EN 61241-0, IEC/EN 61241-1

Functioning
Continual service (S1) at maximum declared centrifugal force and electric power. Intermittent services are also possible depending on the type of vibrator and the operating conditions. For detailed information, contact our technical assistance office.

Centrifugal force
Proportioned for a centrifugal force equal to 5000 Kgf. (49 KN), with eccentric weights not included, to be made by the user.

Mechanical protection
IP 66 according to IEC 529, EN 60529.

Protection against mechanical impacts
IK 08 according to IEC 68, EN 50102.

Insulation class
Class F (155°C), class H (180°C) on request.

Tropicalization
Standard on all vibrators with "drop by drop" trickle system.

Ambient temperature
From -20°C to +40°C. Versions for higher or lower temperatures are available on request.

Vibrator thermal protection
On PTC rated request with thermistor heat detectors 130°C (DIN 44081-44082). Also on request thermistors with different temperatures and anti-condensation heaters.

Fixing of the vibrator
In all positions and therefore without restriction.

Lubrication
All vibrators are lubricated in the factory and do not require further lubrication if used in normal operating conditions ("FOR LIFE" lubricatlon). In heavy duty operating conditions periodical re-lubrication may be applied.

Electrical connection box
The size guarantees passage of tools used for fixing the vibrator to the vibrating machine. The electrical connection must be carried out using the relative connectors inserted inside the connection box.

4 poles - 1500/1800 rpm / 6 poles - 1000/1200 rpm

	Description					Mechanical specifications							Electrical specifications					
						Giri/min.		Centrifugal force kg		Centrifugal force kN		Weight kg	Max input power W		Max. current A 400 V	Max. current A 460 V	I_A/I_N	
	Code	Type	Poles	CSA	II2D Temp. class	50 Hz	60 Hz	50 Hz	60 Hz	50 Hz	60 Hz		50 Hz	60 Hz	50 Hz	60 Hz	50 Hz	60 Hz
three-phase	601223	**VB 15/2510-D**	4	•	150°C	1500	1800	**2500**	**2500**	**24.5**	**24.5**	68	2016	2600	3.60	4.10	3.50	3.58
	602171	**VB 10/2510-D**	6	•	150°C	-	1200	**-**	**2500**	**-**	**24.5**	68	-	2100	-	3.22	-	3.27
	601378	**VB 15/5000-LM**	4	•	135°C	1500	1800	**5000**	**5000**	**49.0**	**49.0**	101	3600	3400	6.00	5.00	7.02	8.00

I_A/I_N = ratio between start-up current and maximum current.

Certifications

Regulation CAN/CSA - C22.2, N. 100-95, file n° LR 100948 Class 4211 01 – Motors and generators.

Certificate of Conformity n° IECEx CES 09.0001X following standards IEC 61241-0, IEC 61241-1.

Mechanical protection IP66 (EN 60529), protection against impacts IK 08 (EN 50102)

Comply with the applicable European Union directives

II 2 D, tD A21 IP66
IEC/EN 61241-0, IEC/EN 61241-1
Certificate n. LCIE 05 ATEX 6163X

KOSHA Korea
Certificate n° 11-AVG BO-0359
Ex td A21 IP66

Certificate GOST-R
n° POCC IT.AB72.B03026, standards GOST R 51330.0-99, GOST R 51330.8-99, GOST R IEC 61241-1-1-99

Upon request available version VB-C Class I, Div. 2, Groups ABCD standards CAN/CSA-C22.2

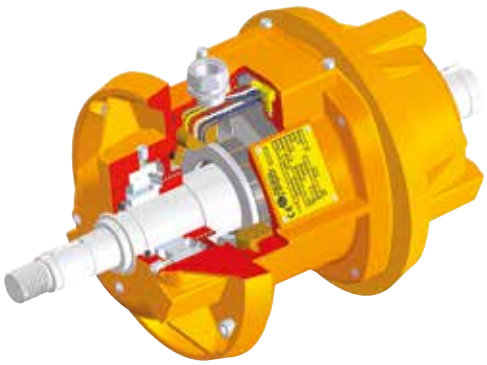

Special shaped terminals allow to fix the power supply cable, protecting it from loosening.

Electric motor
Three-phase asynchronous type. Designed for maximum starting torques and torque curves specific to requirements of vibrating machines. Insulated windings using “drop by drop” trickle system with class H resin. The rotor is die cast aluminium.

Casing
In spheroidal cast iron to have high strength and optimal elasticity.

Bearing flange
Constructed in spheroidal cast iron. The geometry of the flange transmits the load to the casing uniformly.

Bearings
Custom made with particular geometry, especially designed for Italvibras, suitable to support both high radial and axial loads.

Motor shaft
In treated steel alloy (Isothermic hardening) resistant to stress.

Eccentric weights
Not envisioned, to be made and mounted by the user.

Weight covers
Not envisioned.

Painting
Electrostatic surface treatment based on polymerised epoxy polyester powder in oven at 200°C. Tested in salt spray for 500 hours.

Stainless steel protection
On request, corrosion high grade protection (stainless steel micro suspensions in a polyurethanic paint) is available.

Fig. H

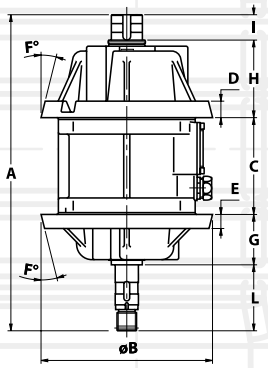

Dimensional specifications (mm)

Type	Fig.	A	øB	C	D	E	F°	G	H	I	L	Cable entry thread
VB 15/2510-D	**H**	517.5	281	158.5	**30**	**26**	**14**	85.3	136.6	35	108	M32x1.5
VB 10/2510-D	**H**	517.5	281	158.5	**30**	**26**	**14**	85.3	136.6	35	108	M32x1.5
VB 15/5000-LM	**H**	555	342	208	**48**	**48**	**25**	106.5	110	60.5	70	M32x1,5

VB-E

The double-conical flange VB-E vibrators have been designed for use in industrial processes in environments with a potentially explosive atmosphere, caused by gas and dusts, in compliance with ATEX Directive (94/9/EC).
They are supplied without eccentric weights, which must be realised and mounted by the Manufacturer of the vibrating machine. In particular, these vibrators can be used in areas 1 and 2 (gas) and in areas 21 and 22 (dusts) according to the layout and following features:

Category: II 2 GD

Level of protection: Ex e IIC T3/T4 Gb,
Ex tb IIIC T...°C Db

Temperature class: See table

EC certificate: LCIE 06 ATEX 6092 X

Zones of use: 1, 2, 21, 22

Technical features

Power supply
Three-phase voltage from 220V to 690V, 50Hz or 60Hz; suitable for use with an inverter from 20Hz to the base frequency with constant torque load profile.

Polarity
4 poles.

Conformity with European Directives
Low Voltage 2006/95/EC,
ATEX 94/9/EC.

Reference Regulations
IEC/EN 60079-0, IEC/EN 60079-7,
IEC/EN 60079-31, EN 60034-1.

Controls
The components that affect protection are 100% accurately controlled and recorded.

Functioning
Continual service (S1) at maximum declared centrifugal force and electric power.

Centrifugal force
Proportioned for a centrifugal force equal to 5000 Kgf. (49 KN), with eccentric weights not included, to be made by the user.

Mechanical protection
IP 66 according to IEC 529, EN 60529.

Protection against mechanical impacts
IK 08 according to IEC 68, EN 50102.

Insulation class
Class F (155°C).

Tropicalization
Standard with “drop by drop” trickle system.

Ambient temperature
From -20°C to +40°C, on request it is possible to have vibrators for maximum ambient temperatures of +55°C in temperature class T3.

Vibrator thermal protection
On request with PTC rated thermistor heat detectors 130°C (DIN 44081-44082). Also on request thermistors with different temperatures and anti-condensation heaters.

Fixing of the vibrator
In all positions and therefore without restriction.

Lubrication
All vibrators are lubricated in the factory and do not require further lubrication if used in normal operating conditions (”FOR LIFE” lubrication). In heavy duty operating conditions periodical re-lubrication may be applied.

4 poles - 1500/1800 rpm

	Description			Mechanical specifications							Electrical specifications					
				rpm		Centrifugal force kg		Centrifugal force kN		Weight kg	Temp. class (G)	Temp. class (D)	Max input power W		Power rating W	
	Code	Type	Poles	50 Hz	60 Hz	50 Hz	60 Hz	50 Hz	60 Hz				50 Hz	60 Hz	50 Hz	60 Hz
three-phase	6E1223	**VB 15/2510-D-E**	4	1500	1800	**2500**	**2500**	**24.5**	**24.5**	68	T3 T4	150°C	1700 1220	1800 1350	1390 1030	1480 1100
	6E1378	**VB 15/5000E-LM**	4	1500	1800	**5000**	**5000**	**49.0**	**49.0**	101	T3	135°C	3200	3700	2560	2800

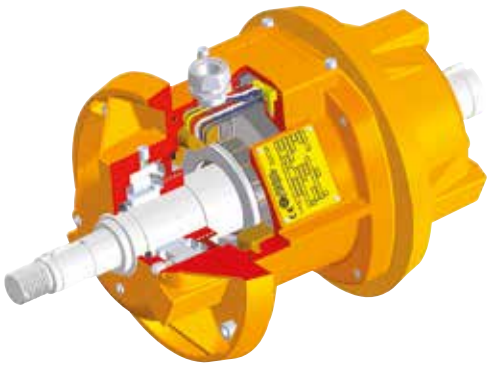

Certifications

II 2 GD - Class Ex e IIC T3/T4 Gb,
Ex tb IIIC T...°C Db
IEC/EN 60079-0, IEC/EN 60079-7, IEC/EN 60079-31
Certificate n° LCIE 06 ATEX 6092 X

Comply with the applicable
European Union directives: ATEX (94/9/EC),
Low Voltage (2006/95/EC).

GGTN Permit and Gost-R certificate:
Ex e II T3/T4 - DIP A21 IP66
standards GOST R 51330.0-99,
GOST R 51330.8-99, GOST R IEC 61241-1-1-99.

KOSHA Korea
Certificate n° 11-AV4 BO-0346/7/8/9/50/51
Ex e II T3/T4 - Ex td A21 IP66

Certificate of Conformity
n° IECEx LCI 10.0003X
following standards IEC 61241-0, IEC 61241-1,
IEC 60079-0, IEC 60079-7

Electrical connection box
The size guarantees passage of tools used for fixing the vibrator to the vibrating machine. The electrical connection must be carried out using the relative connectors inserted inside the connection box. Special shaped terminals allow to fix the power supply cable, protecting it from loosening.

Electric motor
Three-phase asynchronous type. Designed for maximum starting torques and torque curves specific to requirements of vibrating machines. Insulated windings using "drop by drop" system with class H resin. The rotor is die cast aluminium.

Casing
In spheroidal cast iron to have high strength and optimal elasticity. An external earthing screw is located on the casing as prescribed by standard IEC/EN 60079-0.

Bearing flange
Constructed in spheroidal cast iron. The geometry of the flange transmits the load to the casing uniformly.

Bearings
Custom made with particular geometry, especially designed for Italvibras, suitable to support both high radial and axial loads.

Motor shaft
In treated steel alloy (Isothermic hardening) resistant to stress.

Eccentric weights
Not envisioned, to be made and mounted by the user.

Weight covers
Not envisioned.

Painting
Electrostatic surface treatment based on polymerised epoxy polyester powder in oven at 200°C. Tested in salt spray for 500 hours.

Stainless steel protection
On request, corrosion high grade protection (stainless steel micro suspensions in a polyurethanic paint) is available.

Fig. H

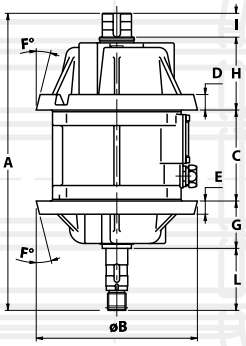

Max. current A 400 V 50 Hz	Max. current A 460 V 60 Hz	t_E (s)	I_A/I_N	Type	Fig.	A	øB	C	D	E	F°	G	H	I	L	Cable entry thread
						Dimensional specifications (mm)										
2.85 2.38	2.80 2.30	7 6	6.70 7.76	**VB 15/2510-D-E**	**H**	517.5	281	158.5	**30**	**26**	**14**	85.3	136.6	35	108	M32x1.5
5.70	5.45	6	7.00	**VB 15/5000E-LM**	**H**	555	342	208	**48**	**48**	**25**	106.5	110	60.5	70	M32x1,5

t_E (s) = set time t_E from IEC/EN 60079-7. I_A/I_N = ratio between start-up current and maximum current.

VU

The VU series linear motion exciters manufactured by Italvibras have been designed for medium and large size vibrating machines operating in many industrial processes.

The state of the art design and components selected, offer best performance, low operating noise, resulting in a longer lifetime for bearings and gears.

Model VU exciters can be mounted in line (connected through cardan shafts), in order to achieve higher centrifugal forces.

Technical features

Functioning
Vu linear motion exciters are composed by a casing (central body) that, by means of 4 bearings supports two shafts, synchronized by two helicoidal ground gears. The eccentric weights are mounted at the end of both shafts, rotating synchronized in opposite sense, determining a resulting unidirectional centrifugal force perpendicular to the mounting surface of the exciter.

Confomity to European Directives
In the application field of the Machinery Directive 2006/42/EC, the VU linear motion exciters can be considered as "partly completed machinery".

Static moment
From 3140 to 119525 kgmm. The static moment of eccentric weights can be adjusted by means of the additional weights.

Centrifugal Force
Up to 453kN.

Ambient temperature
From -40°C to +70°C.

Exciter mounting position
VU exciters can be mounted in all positions, always with the shafts in horizontal position.

Lubrication
Gears and bearings are oil splash / spray lubricated.

Driving system
The movement is transmitted by an external driving system coupled with the driving shaft by means of a joint, generally a Cardan joint (recommended). The external driving system can be an electric motor, a hydraulic motor or other motor type, directly coupled or by belts and pulleys.

Casing
In spheroidal cast iron.

Bearings
Spherical roller bearings, highest quality, rated lifetime in excess of 40000 hours in conditions of maximum load.

Shafts
In treated steel alloy (Isothermic hardening) resistant to stress.

Eccentric weights / additional weights
Eccentric weights in steel, additional weights in steel and/or lead.

Weight covers
All exciters are equipped with two weight covers for protection from rotating parts.

Painting
Electrostatic surface treatment based on polymerised epoxy polyester powder in oven at +200°C. Tested in salt spray for 500 hours.

Description			Specifications					
Code	Type	Frame	Weights setting	Static moment kgmm	Max RPM	Centrifugal force kN	Weight kg	Motor rating kW
0605033	**VU 5000/6-S08**	270	Min	3140	1348	63	240	4
			Max	5435	1062	67	265	
0605021	**VU 8000/6-S08**	280	Min	4130	1470	98	298	5.5
			Max	8065	1100	107	340	
0605020	**VU 10000/6-S08**	280	Min	4294	1443	98	300	5.5
			Max	9693	1000	107	357	
0605022	**VU 14000/6-S08**	295	Min	7642	1316	145	430	7.5
			Max	13955	1000	153	490	
0605032	**VU 16000/6-S08**	295	Min	7963	1293	146	433	11
			Max	15950	956	160	509	
0605023	**VU 18000/6-S08**	297	Min	8225	1435	186	563	11
			Max	17980	1000	197	649	
0605025	**VU 23000/6-S08**	297	Min	10410	1410	227	631	15
			Max	22885	1000	252	741	
0605024	**VU 27000/8-S08**	297	Min	12065	1115	164	629	11
			Max	26635	750	164	758	
0605026	**VU 33000/6-S08**	310	Min	17650	1220	288	895	18.5
			Max	32583	935	312	1005	
0605028	**VU 38000/6-S08**	310	Min	20448	1153	298	949	18.5
			Max	37881	882	323	1078	
0605027	**VU 42000/8-S08**	310	Min	20060	1087	260	949	18.5
			Max	42060	750	260	1116	
0605029	**VU 74000/8-S08**	320	Min	43580	940	423	1520	30
			Max	73440	750	453	1703	
0605041	**VU 103000/6-S08**	360	Min	58862	945	576	2232	45
			Max	102955	741	620	2450	
0605042	**VU 120000/6-S08**	360	Min	65940	900	585	2335	55
			Max	119525	694	632	2600	

Italvibras competence and experience, in the vibration field by over 50 years, are the best guarantee for reliability and safety of the VU series exciters.

The VU linear motion exciters are completely designed, manufactured and tested in Italy.

Other features

The VU Italvibras exciters are supplied with:

- coupling flange according to DIN standard on the driving shaft (on request a second flange on the opposite side);
- additional weights, based on the requested weights setting;
- oil level dipstick, magnetic plugs and breather plug with valve;
- technical handbook for use and maintenance.

On request Italvibras can supply the complete driving system including joints, shaft extension and electric motor.

Different mounting bolt patterns are available. Please contact sales office at Italvibras.

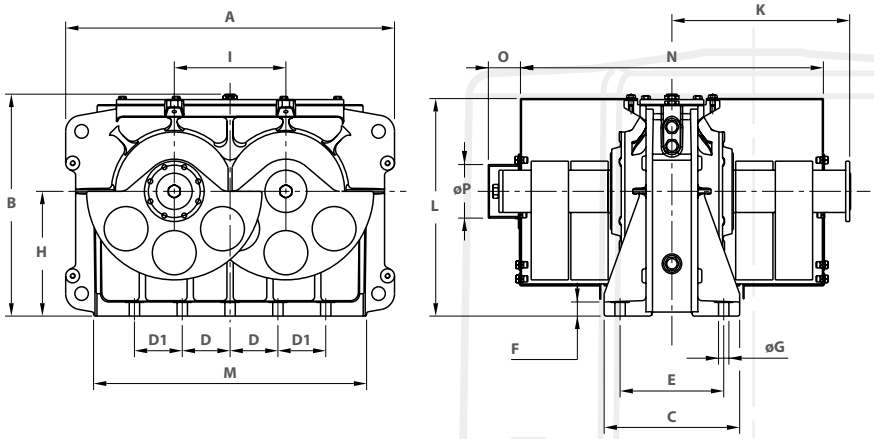

Dimensional features (mm)

Type	A	B	C	D	D1	E	ØG	N°	F	H	I	K	L	M	N	O	ØP
VU 5000/6-S08	655	410	250	1x190	2x110	165	22	8xM20	25	225	210	320.5	407.5	545	530	69.5	97
VU 8000/6-S08	700	453.5	260	1x190	2x110	165	22	8xM20	30	240	232	330.5	442.5	575	555	69.5	97
VU 10000/6-S08	700	453.5	260	1x190	2x110	165	22	8xM20	30	240	232	331.5	442.5	575	555	69.5	97
VU 14000/6-S08	760	508.5	270	1x220	2x110	190	26	8xM24	30	280	256	389	497.5	640	670	69.5	107
VU 16000/6-S08	760	508.5	270	1x220	2x110	190	26	8xM24	30	280	256	389	497.5	640	670	69.5	107
VU 18000/6-S08	825	551.5	340	4x120	-	260	26	10xM24	35	310	280	407	540.5	685	685	80.5	133
VU 23000/6-S08	825	551.5	340	4x120	-	260	26	10xM24	35	310	280	446	540.5	685	760	80.5	133
VU 27000/8-S08	825	551.5	340	4x120	-	260	26	10xM24	35	310	280	476	540.5	685	820	80.5	133
VU 33000/6-S08	925	629	380	5x120	-	300	32	12xM30	35	350	320	476.5	618	770	815	83	143
VU 38000/6-S08	925	629	380	5x120	-	300	32	12xM30	35	350	320	510.5	618	770	885	83	143
VU 42000/8-S08	925	629	380	5x120	-	300	32	12xM30	35	350	320	524.5	618	770	915	83	143
VU 74000/8-S08	1070	708	470	4x120	2x150	390	32	14xM30	35	390	370	592	698.5	920	1045	85	161
VU 103000/6-S08	1280	830	500	1x280	4x160	410	39	12xM36	45	460	440	629.5	821	1135	1075	115.5	200
VU 120000/6-S08	1280	830	500	1x280	4x160	410	39	12xM36	45	460	440	661.5	821	1135	1140	115.5	200

ITV-VR/ITVAF

Technical features

Power supply
Three-phase voltage from 24V to 690V at the various frequencies, depending on the type and series. It is advisable to use the Vibravar, Multivar or the CFV variable high frequency power suppliers to power the electric vibrators.

Conformity to the European Directives
Low Voltage 2006/95/EC.

Reference standards
EN 60034-1.

Operation
Continuous service (S1) at the maximum declared centrifugal force and electric power values.

Centrifugal force
Range extended up to 5300 kgf (52kN) with force output adjustable from 0 to 100%.

Mechanical protection
IP66 according to IEC 529, EN 60529; IK08 protection against impact.

Insulation class
Class F (155°C).

Tropicalization
Standard on all vibrators, with vacuum encapsulation up to size AF33 and for frame size AF70, with "drop by drop" trickle system for sizes AF50 and AF68.

Ambient temperature
To operate correctly, from -20°C to +40°C.

Vibrator thermal protection
With PTC rated thermistor heat detectors 130°C installed as part of the standard assembly size AF70 onwards.
Also on request thermistors with different temperatures and anti-condensation heaters can be assembled on the lower sizes.

Fixing of the vibrator
In all positions and therefore without restriction. Two different types of connection are available for the ITV-VR and ITVAF series: fixed connection, where the electric vibrators are connected to the structure by bolts through fixing holes and the RS cradle connection, where the electric vibrators are connected to the structure with the standardized cradle type RS2 except for frame size AF10, for this the cradle fixing is type RS1.

Lubrication
All the electric vibrators are correctly lubricated in our factory and need no further lubrication when used. Special grease for high-speed operation is used for frame sizes AF50, AF68 and AF70 a periodic re-lubrication is recommended by means of special grease nipples. The excess grease is discharged into the weight compartment by means of the differentiated labyrinth system.

Terminal box
Generously sized to make the electrical connections easier. Special shaped terminals allow to fix the power supply cable.

Electric motor
Three-phase asynchronous type.

Casing
Specifically designed for high speed duty. In high tensile strength aluminium alloy for frame sizes AF10, AF30 and AF33. In spheroidal cast iron for sizes AF33 (600245), AF50, AF68 and AF70.

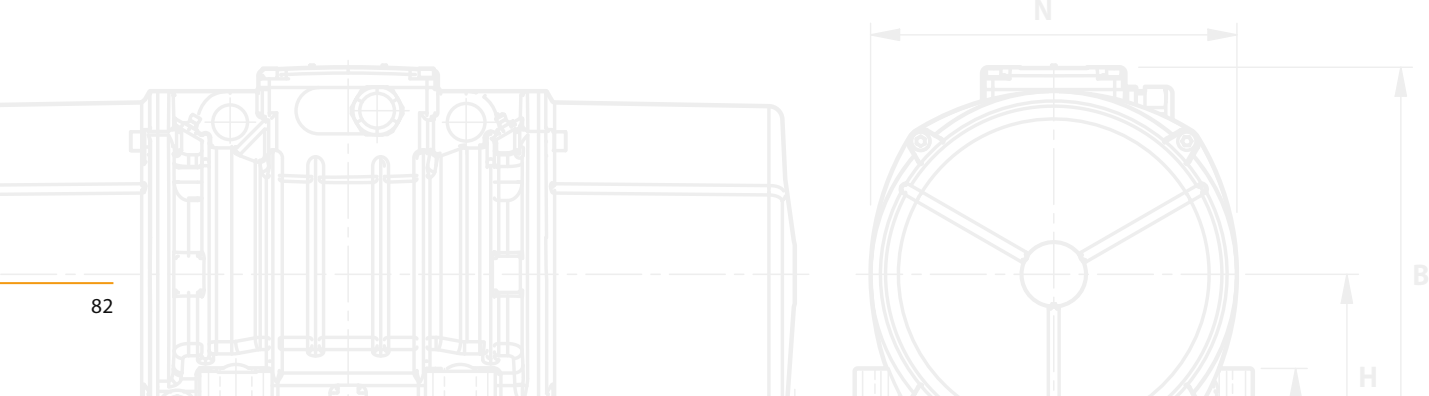

Italvibras produces 2 series of electric vibrators with frequency variation which can be applied to systems and machines in the precasting industry:

ITV-VR Series, with variable frequency;
ITVAF Series, with fixed frequency.

The ITV-VR series electric vibrators are able to provide a centrifugal force of up to 5300 Kgf (52 kN) at a frequency varying from 0 to 6.000 rpm. The ITVAF series electric vibrators with fixed vibration (6000 or 9000 rpm) provide a vibrating energy of up to 1480 Kgf (14,6 kN).
Both are available with either the fixed or cradle connection.

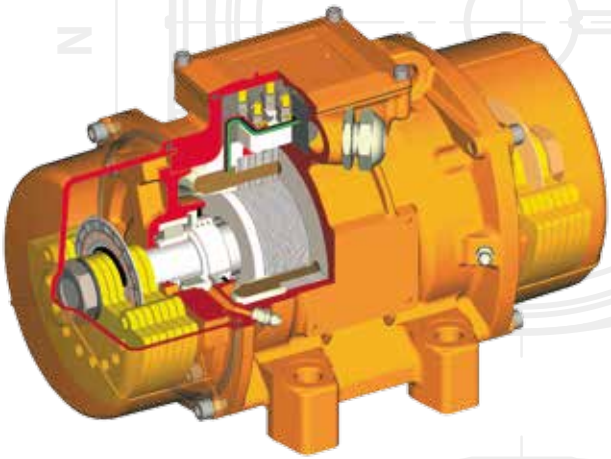

Bearings
A special shape, exclusively designed and made for Italvibras and able to bear strong loads at high speeds.

Motor shaft
in treated steel alloy (isothermic hardering) able to withstand high stress.

Eccentric weights
Specially shaped lamellar type that can be easily adjusted.

Weight covers
In aluminium alloy treated with rust inhibitor. They are perfectly dustproof, watertight and offer optimum shock resistance in all conditions of use and work environments.

Painting
Electrostatic surface treatment based on polymerised epoxy polyester powder in oven at 200°C. Tested in salt spray for 500 hours.

Certifications

Regulation CAN/CSA - C22.2 N. 100-95, file n° LR100948 Class 4211 01 – Motors and generators.

Certificate GOST-R standards GOST 16261.1-85, GOST 16264.0-85, GOST R 51689-2000.

Mechanical protection IP66 (EN 60529), protection against impacts IK 08 (EN 50102)

Comply with the applicable European Union directives

ITV-VR/ITVAF

Fig. A

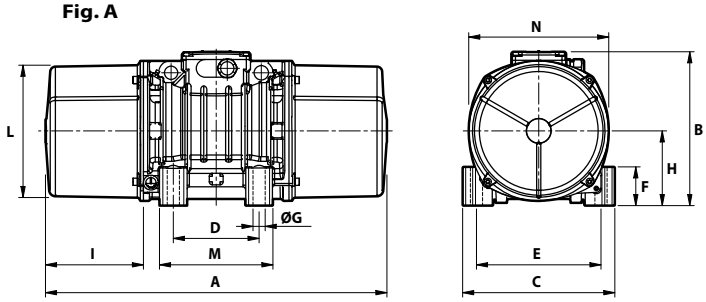

ITV-VR fixed connection

Code	Type	SIZE		Plage vibrat. (vibr./mn.)	Centrifugal force kg	Centrifugal force kN	Weight kg	Max input power W	Max. current A 100 Hz 42V	Max. current A 100 Hz 400V	I_A/I_N
600500	**ITV-VR/1210-S08**	AF33	•	0÷6000	**1569**	**15.4**	23	1200	21	2.3	4.48
600507	**ITV-VR/2010-S08**	AF33	•	0÷6000	**2000**	**19.6**	27	1700	27	2.9	5.00
600248	**ITV-VR/2510**	AF50	-	0÷6000	**2500**	**24.5**	41	2200	35	3.9	6.15
600249	**ITV-VR/2510-V ***	AF50	-	4500÷6000	**2500**	**24.5**	41	2200	35	3.9	6.15
600208	**ITV-VR/3300 ***	AF68	-	4500÷6000	**3300**	**32.3**	74	4000	-	7.2	5.10
600514	**ITV-VR/5000-S02**	AF70	-	0÷4300	**5300**	**52.0**	105	5000	-	8.0	5.30

ITV-VR RS cradle connection

Code	Type	SIZE		Plage vibrat. (vibr./mn.)	Centrifugal force kg	Centrifugal force kN	Weight kg	Max input power W	Max. current A 100 Hz 42V	Max. current A 100 Hz 400V	I_A/I_N
600508	**ITV-VR/1210-RS-S08**	AF33	•	0÷6000	**1569**	**15.4**	21	1200	21	2.3	4.48
600245	**ITV-VR/2010-RS**	AF33	•	0÷6000	**2000**	**19.6**	28	1700	27	2.9	5.00

* Special ventilated type for heavy service.

ITVAF fixed connection

Code	Type	SIZE		Plage vibrat. (vibr./mn.)	Centrifugal force kg	Centrifugal force kN	Weight kg	Max input power W	Max. current A 200 Hz 42 V	Max. current A 200 Hz 250 V	Max. current A 150 Hz 42 V	Max. current A 150 Hz 250 V	Max. current A 100 Hz 250 V	I_A/I_N
603050	**ITVAF 6/600-S02**	AF10	-	6000	**610**	**5.98**	8.0	500	9.5	1.6	-	-	1.6	4.50
603044	**ITVAF 6/1000-S02-BSH**	AF30	-	6000	**1022**	**9.70**	18	1000	20	3.3	-	-	3.7	6.06
603043	**ITVAF 6/1200-S02-BSH**	AF30	-	6000	**1200**	**11.3**	18	1000	20	3.3	-	-	3.7	6.06
603053	**ITVAF 6/1220-S08**	AF33	-	6000	**1095**	**10.7**	23	1200	23	3.85	-	-	3.9	6.04
603054	**ITVAF 6/1510-S08**	AF33	-	6000	**1484**	**14.6**	25	1700	29	4.9	-	-	4.8	7.10
603037	**ITVAF 6/2010-S90**	AF50	-	6000	**1978**	**19.4**	40	2000	35	5.9	-	-	5.9	8.00
603010	**ITVAF 6/3300 °**	AF68	-	6000	**2800**	**27.5**	74	4000	-	-	-	-	11	5.10
604041	**ITVAF 9/1110-S08**	AF33	-	9000	**1230**	**12**	22	1150	-	-	18	-	-	8.52
604042	**ITVAF 9/1510-S08**	AF33	-	9000	**1484**	**14.6**	24	1600	-	-	24	4.0	-	10.4

ITVAF RS cradle connection

Code	Type	SIZE		Plage vibrat. (vibr./mn.)	Centrifugal force kg	Centrifugal force kN	Weight kg	Max input power W	Max. current A 200 Hz 42 V	Max. current A 200 Hz 250 V	Max. current A 150 Hz 42 V	Max. current A 150 Hz 250 V	Max. current A 100 Hz 250 V	I_A/I_N
603049	**ITVAF 6/600-RS1-S02**	AF10	-	6000	**610**	**5.98**	8.0	500	9.5	1.6	-	-	1.6	4.50
603055	**ITVAF 6/1220-RS-S08**	AF33	-	6000	**1095**	**10.7**	21	1200	23	3.85	-	-	3.9	6.04
603056	**ITVAF 6/1510-RS-S08**	AF33	-	6000	**1484**	**14.6**	23	1700	29	4.9	-	-	4.8	7.10
604043	**ITVAF 9/1110-RS-S08**	AF33	-	9000	**1230**	**12**	20	1150	-	-	18	-	-	8.52
604044	**ITVAF 9/1510-RS-S08**	AF33	-	9000	**1484**	**14.6**	22	1600	-	-	24	4.0	-	10.4

° Only supplied at 250V-100Hz, ventilated type, IP44 protection. I_A/I_N = ratio between start-up current and maximum current.

Fig. AH

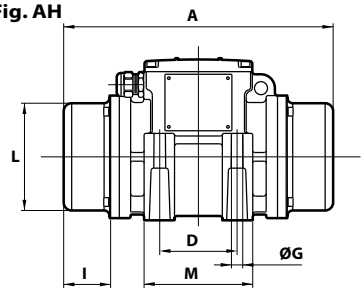

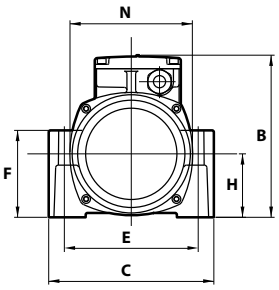

Fig. D

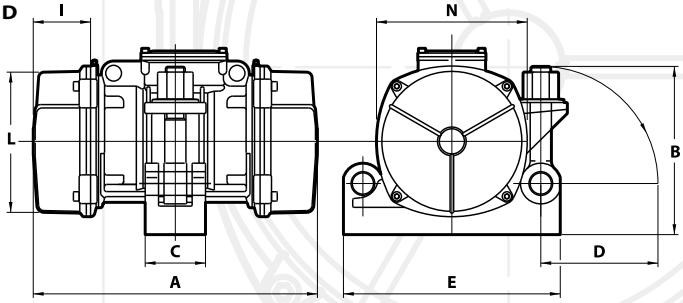

Dimensional specifications (mm)

Type	Fig.	A	B	C	D	E	Holes øG	Holes N°	F	H	I	L	M	N
ITV-VR/1210-S08	**A**	289	216.5	215	**100**	**180**	**17**	**4**	47	93.5	63	170	145	182
ITV-VR/2010-S08	**A**	375	216.5	215	**100**	**180**	**17**	**4**	47	93.5	106	170	145	182
ITV-VR/2510	**A**	430	230	230	**140**	**190**	**17**	**4**	49	104	87.5	186	180	200
ITV-VR/2510-V *	**A**	465	230	230	**140**	**190**	**17**	**4**	49	104	105	240	180	248
ITV-VR/3300 *	**A**	528	267	310	**155**	**255**	**23.5**	**4**	122	115	147	265	215	275
ITV-VR/5000-S02	**A**	560	290	310	**155**	**255**	**25**	**4**	90	130	137	238	210	250
ITV-VR/1210-RS-S08	**D**	289	189	83	**140**	**240**	**-**	**-**	-	-	63	170	-	182
ITV-VR/2010-RS-S08	**D**	355	189	83	**140**	**240**	**-**	**-**	-	-	81.5	164	-	179

Dimensional specifications (mm)

Type	Fig.	A	B	C	D	E	Holes øG	Holes N°	F	H	I	L	M	N
ITVAF 6/600-S02	**A**	255	179	152	**90**	**125**	**13**	**4**	28	73	54	124	128	141
ITVAF 6/1000-S02-BSH	**AH**	310	186	190	**90**	**154**	**13**	**4**	100	73	54	124	125	141
ITVAF 6/1200-S02-BSH	**AH**	310	186	190	**90**	**154**	**13**	**4**	100	73	54	124	125	141
ITVAF 6/1220-S08	**A**	289	216.5	215	**100**	**180**	**17**	**4**	47	93.5	63	170	145	182
ITVAF 6/1510-S08	**A**	375	216.5	215	**100**	**180**	**17**	**4**	47	93.5	106	170	145	182
ITVAF 6/2010-S90 °	**A**	430	230	230	**140**	**190**	**17**	**4**	49	104	87.5	186	180	200
ITVAF 6/3300 °	**A**	528	267	310	**155**	**255**	**23.5**	**4**	122	115	147	265	215	275
ITVAF 9/1110-S08	**A**	289	216.5	215	**100**	**180**	**17**	**4**	47	93.5	63	170	145	182
ITVAF 9/1510-S08	**A**	375	216.5	215	**100**	**180**	**17**	**4**	47	93.5	106	170	145	182
ITVAF 6/600-RS1-S02	**D**	255	140	97	**97**	**180**	**-**	**-**	-	-	54	124	-	141
ITVAF 6/1220-RS-S08	**D**	289	189	83	**140**	**240**	**-**	**-**	-	-	63	170	-	182
ITVAF 6/1510-RS-S08	**D**	375	189	83	**140**	**240**	**-**	**-**	-	-	106	170	-	182
ITVAF 9/1110-RS-S08	**D**	289	189	83	**140**	**240**	**-**	**-**	-	-	63	170	-	182
ITVAF 9/1510-RS-S08	**D**	375	189	83	**140**	**240**	**-**	**-**	-	-	106	170	-	182

VIBRAVAR

The electronic vibration frequency regulators

VIBRAVAR fully resolves the primary problem of vibration frequency variation in production processes where vibrating machines or systems are used. VIBRAVAR can continuously vary the powering frequency of the electric vibrators from 0 Hz to the maximum value tolerated by the actual vibrator itself.

In brief, VIBRAVAR can be used to:
- start and stop, reverse and continuously vary the operating frequency from zero to top rate within the envisaged range by means of the local control panel or a remote control;
- program starting and stopping times according to specific needs;

Technical features

Input:
Single-phase 200-240V (±10%), 50/60 Hz (±5%), three-phase 380-480V (±10%), 50-60 Hz (±5%).

Output:
0 to 480V voltage rating, frequency from 0 to 400 Hz, sinusoid PWM coded with programmable carrier frequency.

Mechanical protection:
IP20, IP30.

Environmental specifications:
Max 1000 m without derating; ambient temperature from 0° to 50°C; relative humidity from 5 to 95% without condensation.

Certifications:
UL, CSA, EC.

Conformity to the European Directives:
Low Voltage 2006/95/EC, Electromagnetic compatibility 2004/108/EC.

Choice of the VIBRAVAR
Proceed in the following way to choose the right VIBRAVAR:
a) find the rated current In on the data plate of the electric vibrator you wish to use and multiply it by the number of electric vibrators;
b) multiply the result by the safety factor = 1.88;
c) choose the type of VIBRAVAR that has the output current (see table) immediately above the calculated current value.

	Description		Input		
	Code	Type	Power rating kW	Voltage V	Frequency Hz
single-phase	542600M	**VR M0020**	0.25	200 - 240 ± 10%	50/60 Hz ± 5%
	542601M	**VR M0040**	0.37	200 - 240 ± 10%	50/60 Hz ± 5%
	542602M	**VR M0075**	0.75	200 - 240 ± 10%	50/60 Hz ± 5%
	542603M	**VR M015**	1.5	200 - 240 ± 10%	50/60 Hz ± 5%
	542604M	**VR M022**	2.2	200 - 240 ± 10%	50/60 Hz ± 5%
three-phase	542605A	**VR 022**	2.2	380 - 480 ± 10%	50/60 Hz ± 5%
	542606A	**VR 037**	4	380 - 480 ± 10%	50/60 Hz ± 5%
	542607A	**VR 056**	5.5	380 - 480 ± 10%	50/60 Hz ± 5%
	542608A	**VR 075**	7.5	380 - 480 ± 10%	50/60 Hz ± 5%
	542609A	**VR 112**	11	380 - 480 ± 10%	50/60 Hz ± 5%
	542610A	**VR 150**	15	380 - 480 ± 10%	50/60 Hz ± 5%
	542611A	**VR 180**	18.5	380 - 480 ± 10%	50/60 Hz ± 5%
	542612A	**VR 225**	22	380 - 480 ± 10%	50/60 Hz ± 5%
	542613A	**VR 370**	30	380 - 480 ± 10%	50/60 Hz ± 5%

- select pre-programmed frequencies with the remote control;
- establish frequency variation by means of a signal between 0 and 10 Vd.c., between 0 and 20 mA, or by means of a 5V TTL logic level pulse chain from an external source or by a serial port RS-485;
- reverse the spinning direction at maximum frequency even when the electric vibrators have a high moment of inertia;
- obtain a full check-control both by means of the display on the local panel and via remoted warning signals.

Each VIBRAVAR is equipped with:
- programming and control panel on board;
- protection against power supply voltage variations beyond the indicated tolerance limits for overloads, short-circuits on the output, leakage towards earth and overtemperatures. Faults are indicated on the display.
- no-break components to maintain the preset function even in the event of a power failure lasting no longer than 500 milliseconds.
- EMC filter for high attenuation following table specifications.
- dynamic breaking chopper integrated on the three-phase types over 5,5 kW.

Compliance with main international standards
(EC Directive (EC marking), UL, CSA, C-tick)

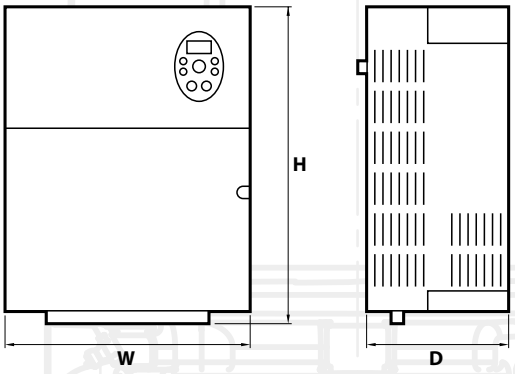

Output								
Power kVA	**Current** A	**Frequency max** Hz	**H** mm	**W** mm	**D** mm	**Weight** kg	**Mechanical protection**	**Filter** EMC
0.6	1.6	200	174	72	136	1.4	IP20	Included
1.0	2.5	200	174	72	136	1.4	IP20	Included
1.6	4.2	200	174	72	136	1.4	IP20	Included
3.0	8.0	200	174	100	136	2.2	IP20	Included
4.0	11	200	174	100	136	2.2	IP20	Included
4.2	6.0	500	174	100	136	2.2	IP20	Included
7.2	8.7	500	174	100	136	2.2	IP20	Included
11	13.0	500	260	130	180	4.3	IP20	Included
13	18.0	500	260	130	180	4.3	IP20	Included
21	24.0	500	260	130	180	4.3	IP20	Included
25	30.0	500	260	130	180	7.5	IP20	Not included
31	38.0	500	384	250	205.4	14	IP30	Not included
37	45.5	500	384	250	205.4	14	IP30	Not included
50	60.0	500	384	250	205.4	15.6	IP30	Not included

CFV

The vibrating frequency regulating panels

CFV panels are fixed devices for regulating the vibration frequency by means of the VIBRAVAR inside.
Simple use, easy to control, compact and safe: these are the main features of the CFV panel.
CFV is the technological evolution of the conventional electromechanical frequency converter, the advantage being that it provides variable frequency in a linear way. On specific request, it can also be fitted with controls, protections and operating components.

Technical features

CFV can be used to power the following electric vibrator models:

Type of starting	Electric vibrators type	CFV-037P P 3,7 kW	CFV-056P P 5,5 kW	CFV-075P P 7,5 kW	CFV-112P P 11 kW
ITV-VR one at time	ITV-VR/1210-S08 • ITV-VR/1210-RS-S08	2	5	7	10
	ITV-VR/2010-S08 • ITV-VR/2010-RS	0	3	4	8
	ITV-VR/2510 • ITV-VR/2510-V	0	0	2	4
ITV-VR two at time	ITV-VR/1210-S08 • ITV-VR/1210-RS-S08	0	2	4	8
	ITV-VR/2010-S08 • ITV-VR/2010-RS	0	0	0	4
ITVAF one at time	ITVAF 6/600-S02 • ITVAF 6/600-RS1-S02	8	13	16	24
	ITVAF 6/1000-S02-BSH	1	4	6	11
	ITVAF 6/1200-S02-BSH	1	4	6	11
	ITVAF 6/1220-S08 • ITVAF 6/1220-RS-S08	1	3	5	9
	ITVAF 6/1510-S08 • ITVAF 6/1510-RS-S08	0	1	2	5
	ITVAF 6/2010-S90	0	0	0	2
	ITVAF 6/3300	0	0	0	1
	ITVAF 9/1110-S08 • ITVAF 9/1110-RS-S08	0	3	5	11
	ITVAF 9/1510-S08 • ITVAF 9/1510-RS-S08	0	0	1	5
ITVAF two at time	ITVAF 6/600-S02 • ITVAF 6/600-RS1-S02	6	12	16	24
	ITVAF 6/1000-S02-BSH	0	0	2	6
	ITVAF 6/1200-S02-BSH	0	0	2	6
	ITVAF 6/1220-S08 • ITVAF 6/1220-RS-S08	0	0	0	4
	ITVAF 9/1110-S08 • ITVAF 9/1110-RS-S08	0	0	0	2

Conformity to the European Directives:
Low Voltage 2006/95/EC, Electromagnetic compatibility 2004/108/EC.

CFV comprises:
- electric panel with front door measuring 1350 (height) x 700 (width) x 350 (depth) mm;
- manual threepole main door-locking knife switch with fuses;
- VIBRAVAR inverter with EMC filter;
- keyboard on the panel front for controlling and programming purposes;
- 400V-42V transformer (only in the 42V models).

Optionals
- electromechanical operating and protecting components of a number equal to that of the vibrators (automatic switches and operation disconnectors);
- 3P+G output sockets for connecting the electric vibrators.

Description		Input			Output			
Code	**Type**	**Power rating** kW	**Voltage** V	**Frequency** Hz	**Power** kVA	**Current max** A	**Voltage** V	**Frequency** Hz
543049A	**CFV 037P 42V**	4.0	380 - 480 ± 10%	50/60 ± 5%	7.2	90	42	0-200
543049B	**CFV 037P 400V**	4.0	380 - 480 ± 10%	50/60 ± 5%	7.2	9.5	400	0-200
543050A	**CFV 056P 42V**	5.5	380 - 480 ± 10%	50/60 ± 5%	11.0	136	42	0-200
543050B	**CFV 056P 400V**	5.5	380 - 480 ± 10%	50/60 ± 5%	11.0	14.3	400	0-200
543051A	**CFV 075P 42V**	7.5	380 - 480 ± 10%	50/60 ± 5%	13.0	162	42	0-200
543051B	**CFV 075P 400V**	7.5	380 - 480 ± 10%	50/60 ± 5%	13.0	17.0	400	0-200
543052A	**CFV 112P 42V**	11.0	380 - 480 ± 10%	50/60 ± 5%	21.0	264	42	0-200
543052B	**CFV 112P 400V**	11.0	380 - 480 ± 10%	50/60 ± 5%	21.0	27.7	400	0-200

MULTIVAR

The mobile vibration frequency regulator

The MULTIVAR mobile high variable frequency actuators (Italvibras patent N° M0980000021) meet the increasing demands from building sites where reinforced concrete is precast, for equipment able to facilitate the task.
MULTIVAR can power up to 8 electric vibrators at the same time with 42V or 400V ratings at variable frequencies.
Simple to use, easy to manoeuver, compact and safe: these are the main features of the MULTIVAR frequency regulator.

Technical features

Multivar can be used to power the following electric vibrator models:

Type of starting	Electric vibrators type	MV-4-056P P 5,5 kW	MV-4-075P P 7,5 kW	MV-6-075P P 7,5 kW	MV-6-112P P 11 kW	MV-8-112P P 11 kW
ITV-VR one at time	ITV-VR/1210-S08 • ITV-VR/1210-RS-S08	4	4	6	6	8
	ITV-VR/2010-S08 • ITV-VR/2010-RS-S08	3	4	4	6	8
	ITV-VR/2510 • ITV-VR/2510-V	0	2	2	4	4
ITV-VR two at time	ITV-VR/1210-S08 • ITV-VR/1210-RS-S08	2	4	4	6	8
	ITV-VR/2010-S08 • ITV-VR/2010-RS-S08	0	0	0	4	4
ITVAF one at time	ITVAF 6/600-S02 • ITVAF 6/600-RS1-S02	4	4	6	6	8
	ITVAF 6/1000-S02-BSH • ITVAF 6/1000-RS-S02-BSH	4	4	6	6	8
	ITVAF 6/1200-S02-BSH • ITVAF 6/1200-RS-S02-BSH	4	4	6	6	8
	ITVAF 6/1220-S08 • ITVAF 6/1220-RS-S90-S08	3	4	5	6	8
	ITVAF 6/1510-S08 • ITVAF 6/1510-RS-S08	1	2	2	5	5
	ITVAF 6/2010-S90	0	0	0	2	2
	ITVAF 6/3300	0	0	0	1	1
	ITVAF 9/1110-S08 • ITVAF 9/1110-RS-S08	3	4	5	6	8
	ITVAF 9/1510-S08 • ITVAF 9/1510-RS-S08	0	1	1	5	5
ITVAF two at time	ITVAF 6/600-S02 • ITVAF 6/600-RS1-S02	4	4	6	6	8
	ITVAF 6/1000-S02-BSH • ITVAF 6/1000-RS-S02-BSH	0	2	2	6	6
	ITVAF 6/1200-S02-BSH • ITVAF 6/1200-RS-S02-BSH	0	2	2	6	6
	ITVAF 6/1220-S08 • ITVAF 6/1220-RS-S08	0	0	0	4	4
	ITVAF 9/1110-S08 • ITVAF 9/1110-RS-S08	0	0	0	2	2

MULTIVAR is the ideal substitute for the conventional electro-mechanical frequency converter, the advantages being linear frequency variation with full controls, protection and operating components, ready to power electric vibrators.

Conformity to the European Directives
Low Voltage 2006/95/EC, Electromagnetic compatibility 2004/108/EC.

MULTIVAR comprises:
- a wheel-mounted structure;
- 3P+G power flex and plug for connecting to the 400V 50Hz electricity main;
- threepole main disconnector;
- VIBRAVAR inverter with EMC filter;
- control console with programming and operating keyboard;
- 400V-42V transformer (only in 42V models);
- electromechanical operating and protecting components (remote control switches, thermal protections and fuses);
- 3P+G output sockets for connecting the electric vibrators.

Description		Input			Output			Dimensions			
Code	Type	Potenza nominale kW	Voltage V	Frequency Hz	N° output	Voltage V	Frequency	Height mm	Width mm	Length mm	Weight kg
543036A	**MV-4-056P 42V**	5.5	380 - 480 ± 10%	50/60 ± 5%	4	42	0-200	1000	650	1200	195
543036B	**MV-4-056P 400V**	5.5	380 - 480 ± 10%	50/60 ± 5%	4	400	0-200	1000	650	1200	130
543037A	**MV-4-075P 42V**	7.5	380 - 480 ± 10%	50/60 ± 5%	4	42	0-200	1000	650	1200	205
543037B	**MV-4-075P 400V**	7.5	380 - 480 ± 10%	50/60 ± 5%	4	400	0-200	1000	650	1200	135
543038A	**MV-6-075P 42V**	7.5	380 - 480 ± 10%	50/60 ± 5%	6	42	0-200	1000	650	1200	215
543038B	**MV-6-075P 400V**	7.5	380 - 480 ± 10%	50/60 ± 5%	6	400	0-200	1000	650	1200	145
543039A	**MV-6-112P 42V**	11.0	380 - 480 ± 10%	50/60 ± 5%	6	42	0-200	1000	650	1200	250
543039B	**MV-6-112P 400V**	11.0	380 - 480 ± 10%	50/60 ± 5%	6	400	0-200	1000	650	1200	150
543053A	**MV-8-112P 42V**	11.0	380 - 480 ± 10%	50/60 ± 5%	8	42	0-200	1000	650	1200	250
543053B	**MV-8-112P 400V**	11.0	380 - 480 ± 10%	50/60 ± 5%	8	400	0-200	1000	650	1200	150

SOLUTIONS FOR PREFABRICATION

Electronically controlled systems

These are highly technological systems able to handle 6 to 72 electric vibrators, depending on the installation. A further extension allows the system to handle up to 864 electric vibrators.
Housed in a special panel, the electronically controlled system is equipped with an interactive terminal for compiling, filing and displaying the vibration formulas.
The systems can also be remote controlled.
A characterizing feature of the system is VIBRAVAR, the electronic vibration frequency converter and VIBRALOGIC, the PLC for computerized management of the vibration function.
It can also be equipped with the VIBRATEL remote control, the VIBRALASER reflecting laser system and the VIBRAGEST administration software.

CFV and electromechanically controlled systems

These feature a powering panel containing the VIBRAVAR electronic frequency converter and various sub-panels to control the vibrators and their vibrating frequency. The system's powering panel can handle up to 10 sub-panels, depending on the type. Each sub-panel, available with either a socket or core-hitch type of output for connecting to the vibrator, controls from 4 to 10 electric vibrators. Each sub-panel has 7 fixed vibration frequencies and 1 variable one.
The CFV board can directly power up to 11 electric vibrators (in this case the CFV can be accessorised with organs of protection and manoeuvre for the electric vibrators), or it can power up to 10 sub-boards.

MULTIVAR electromechanically controlled systems

MULTIVAR is the ideal means for replacing conventional electromechanical converters with fixed frequencies, with a system that can vary the frequency / centrifugal force.
It's also an optimum choice for both manufacturers of small concrete items and precasting enterprises when they need to produce specific items that cannot be obtained with normal forms.
MULTIVAR comes complete with control and protection equipment, so it can therefore be connected straight to the electric vibrators.

Electric panel

From 6 to 864
electric vibrators

* Optional.

Vibravar

Vibralogic

Vibratel*

Vibralaser*

Vibragest*

Tele-assistance*

CFV

From 1 to 11
electric vibrators

Vibravar

Sub panel
+ electric vibrator

Sub panel
+ electric vibrator

Sub panel
+ electric vibrator

Multivar

From 1 to 8
electric vibrators

Vibravar

Electric vibrator

Electric vibrator

Electric vibrator

SELECTING THE ELECTRIC VIBRATOR

Vibration systems and methods

The systems that use the vibration technique can be divided into the following categories:
• freely oscillating systems, which will be described in this guide
• oscillating systems bound to resonance, which require specific in-depth research. Please contact the Technical Sales Service of Italvibras if these systems are required.
The free oscillation system includes two different methods:
• rotational: the vibrating force is directed in all directions through 360° in a rotational way, either clockwise or anticlockwise.
• unidirectional: the vibrating force is directed in one single direction in fade-free sinoidal reciprocating mode.
The "rotational" method is obtained by using a single electric vibrator.
The "unidirectional" method is obtained by using two electric vibrators with the same electro-mechanical characteristics, each turning in the opposite direction to the other.

Rotational method

Vibrating force directed in all directions through 306°, in rotational mode.

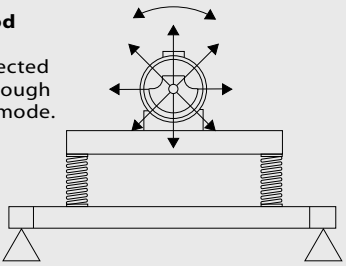

Unidirectional method

Vibrating force in a single direction, in sinusoidal reciprocating mode.

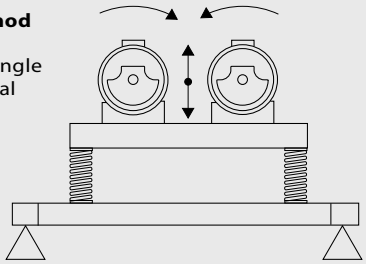

Examples of how electric vibrators are used in different processes

The following examples illustrate a few typical uses:

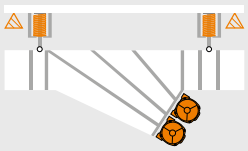

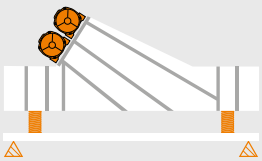

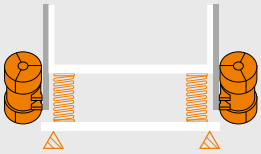

For conveyors, separators, sieves, sizing machines, unloaders, positioners, sorters, feeders and fluidized beds: unidirectional method.

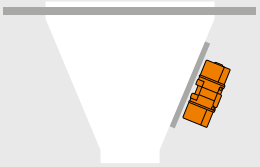

For silos and hoppers: rotational method.

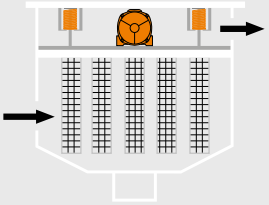

For filters: rotational method.

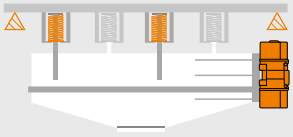

For vibrating beds: rotational method.

For compacting tables and tests (accelerated ageing, stress, ecc.): rotational method.

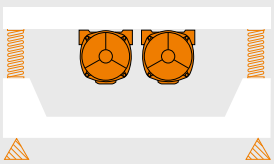

For compacting tables and tests (accelerated ageing, stress, ecc.): unidirectional or rotational method.

Choice of the vibration method and rotation speed (and, thus, the vibration frequency) of the electric vibrator applied to the elastically insulated machine, depending on the process

The choice of the vibration method and vibration frequency able to achieve the utmost efficiency for each type of process, depends on the specific weight and granulometry (or piece size) of the material used in the process itself (consult the Table on page 92).

Regardless of the selected vibration method, the electric vibrators can be mounted on the machine, elastically insulated with its axis in a horizontal or vertical position or, if necessary, in an intermediate position between the two directrices.

The angle of incidence "i" (measured in degrees) of the line of force in relation to the horizontal plane should be taken into due consideration when electric vibrators are applied with the "unidirectional" method.

Important: the line of force for any angle of incidence must pass through center of gravity "G" of the elastically insulated machine (see figure below).

Determination of the angle of incidence of the line of force depends on the type of process and must be within the indicated range.

"i"	**Processes / Uses**
da 6° a 12°	for special separators (e.g.: the milling industry);
da 25° a 30°	for conveying, unloading, feeding, positioning and sorting;
da 31° a 45°	for sifting, grading and separating;
da 45° a 80°	for fluidized beds.

Unidirectional method

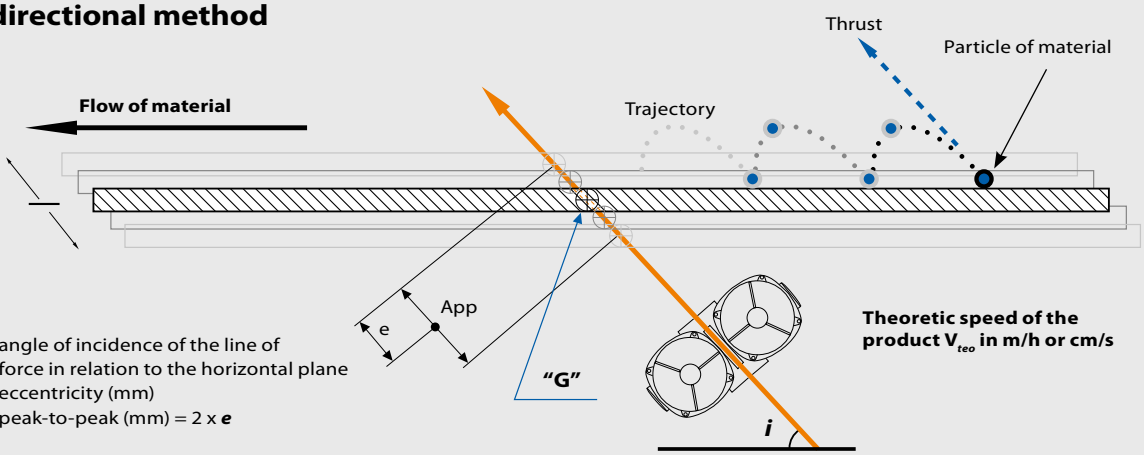

i = angle of incidence of the line of force in relation to the horizontal plane
e = eccentricity (mm)
App = peak-to-peak (mm) = 2 x ***e***

Theoretic speed of the product V_{teo} in m/h or cm/s

Rotational method

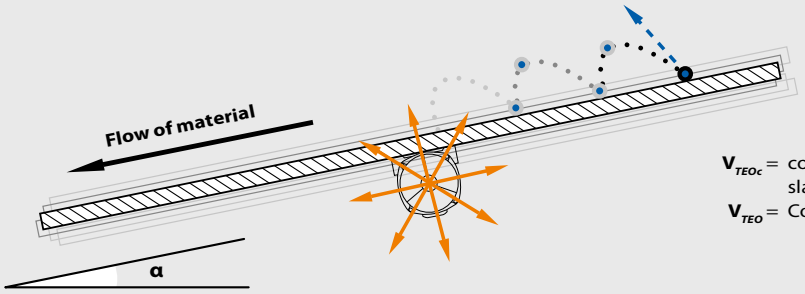

Corrected theoretic speed of the product V_{TEOc} in m/h or cm/s

$$V_{TEOc} = \frac{V_{teo} + V_i}{F\alpha}$$

V_{TEOc} = corrected theoretic speed to take the slant of the machine into account
V_{TEO} = Corrected theoretic of the product

α = angle of inclination of machine in relation to horizontal plane
i = angle of incidence = 90 -α
Vi = speed of incidence (cm/s or m/h)
Fα = corrective factor to calculate corrected theoretic speed V_{TEOC}
e = eccentricity (mm)

} Calculated according to α (see table on right)

Established value	Values calculated according in α		
α	*i*	Fα	V_i
10°	80°	0,81	80
15°	75°	0,71	75
20°	70°	0,60	70
25°	65°	0,48	65
35°	55°	0,25	55

How to choose the right type of electric vibrator for use in typical processes (e.g.: conveying material)

Use the Table on page (92) to select the vibration method and the required number of vibrations per minute depending on the process and the granulometry of the material.
Now move to the diagram (amongst those on pages 93 - 102) corresponding to the obtained number of vibrations per minute.
Choose the corresponding curve on the diagram, for a previously calculated angle of incidence «i» of the line of force (consult the descriptions on page 89).
Using that diagram and that curve: eccentricity value «e» or peak-to-peak amplitude «App», measured in mm and required to obtain the previously mentioned theoretic product advancement speed value «V_{TEO}» or «V_{TEOc}» can be identified for a required theoretic product advancement speed «V_{TEO}» (m/h or cm/s) or «V_{TEOc}» (m/h or cm/s) for tilted machines.
«V_{TEO}» is determined by the flow of material, taking a reduction coefficient into account (see conveyor channel example below). Given eccentricity value «e», it is possible to determine the value of the total static moment «Mt» (Kg.mm) of the electric vibrator or vibrators. This value is calculated by means of the following formula:

Mt = e x Pv
where: Pv = Pc + Po

with
Pv = total weight of the vibrating complex (Kg);
Pc = weight of the elastically isolated appliance (Kg);
Po = weight of the installed electric vibrator (or vibrators) (Kg); hypothetic weight to be subsequently compared to that of the determined vibrator.
Important: calculated moment Mt is the total moment of the electric vibrators. For example, if the vibrating machine has two electric vibrators, the calculated moment must be divided by two to obtain the static moment of each vibrator.
Once the static moment of the vibrator has been calculated, consult the catalogue to determine the type of electric vibrator required.

Checking the validity of the chosen electric vibrator

Having chosen the type of electric vibrator, centrifugal force value «Fc» (in Kg) of the vibrator itself can now be found in the catalogue.

Use formula $a = \frac{Fc}{Pv}$ (measured n times g)

to establish acceleration value «a» along the line of force. This value must be within the range indicated in the Table (on page 92) for the required type of process.
Attention: if the chosen vibration method is “unidirectional”, value «Fc» to use in the above mentioned formula will obviously be twice the value indicated in the catalogue as two electric vibrators are installed.

Conveyor channel

Flow rate and speed of product

$Q = V_p \times L \times S$ $V_p = V_{teo} \times K_r$

Q = flow rate **(m^3/h)**
V_p = speed of product **(m/h)**
L = channel width **(m)**
S = layer of material **(m)**

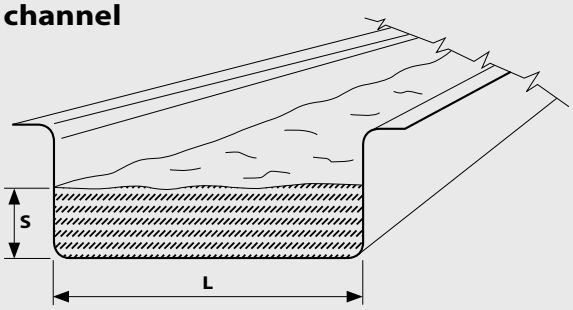

V_{teo} = theoretic speed of the product **(m/h)** (if channel is slanting, indicated **V_{TEOc}**)
K_r = reduction factor depending on the type of product conveyed.
A few values pertaining to this factor are indicated below.

Leaf vegetables	0,70	Wooden shaving or PVC granules	0,75÷0,85
Gravel	0,95	Sand	0,70
Small pieces of coal	0,80	Sugar	0,85
Large pieces of coal	0,85	Salt	0,95

Mechanical insulation of the vibrating equipment from the bearing structure sizing the elastic systems

If free oscillation systems are used, it is advisable to fit anti-vibration mounts (such as helical steel springs, rubber supports or pneumatic actuators) to allow the vibrating machine to freely move in all directions.
Do not use connecting rods, leaf springs or flat springs, etc., for free oscillation systems.
The non-vibrating element must be of adequate capacity, able to bear a weight equal to total weight «Pt» (i.e. the sum of the weights of the elastically insulated machine, or the electric vibrator or vibrators «Pv» and the material bearing on the machine itself «Ps») multiplied by the factor of safety, the value of which is between 2 and 2.5. Capacity «Q» of the elastic element will therefore be:

$$Q_{kg} = \frac{Pv + Ps}{N} \times 2{,}5$$

Where
Pv = total weight of the vibrating complex (Kg)
Ps = static weight of material on machine (Kg)
N = number of anti-vibration mounts

Diagram A

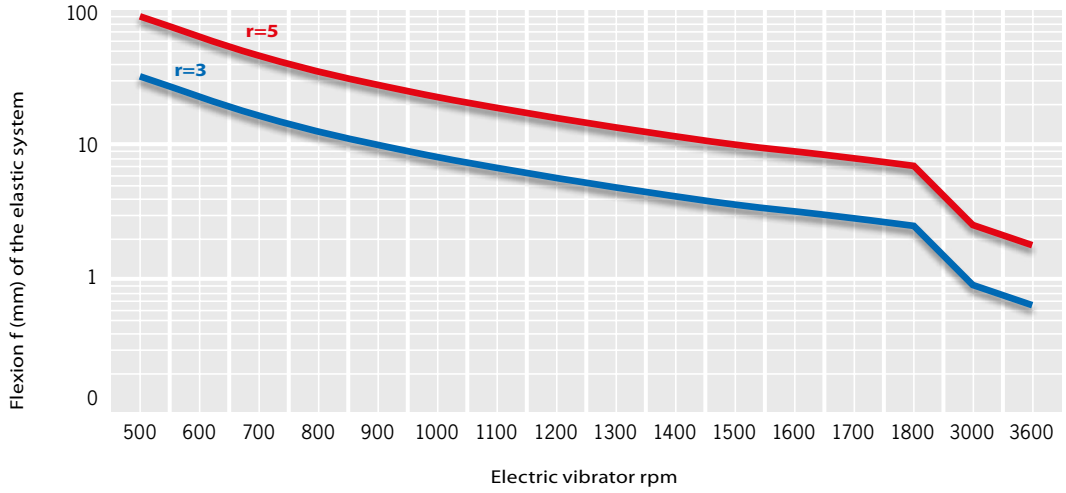

Diagram B

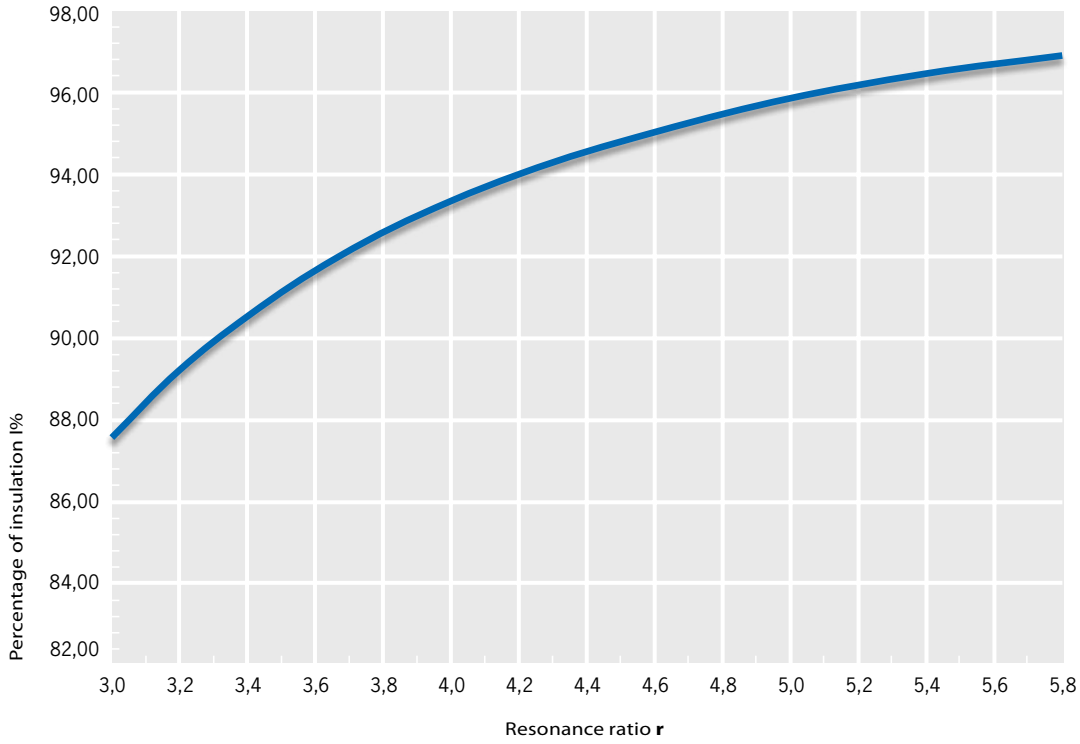

Now determine the camber «f.»of the elastic system by means of diagram A, depending on the vibration frequency (rpm of the electric vibrator) and considering a resonance ratio «r.» (between the vibration frequency of the vibrating complex and the frequency of the elastic system itself) between 3 and 5.
The elastic constant of the anti-vibrating mount thus equals:

$$K_{kg\text{-}mm} = \frac{Pv}{f \times N}$$ where f = flexion of the elastic system (mm)

The capacity «$\mathbf{Q_{kg}}$» and the elastic constant «$\mathbf{K_{kg\text{-}mm}}$» are the two entities required to choose the anti-vibration mounts on the market.
It is absolutely essential to distribute the load of the vibrating complex evenly over the elastic system.
Diagram B gives the percentage of elastic insulation (I%) between the vibrating structure and bearing structure, depending on ratio «r».
The anti-vibration mounts must be positioned so that the flexure is the same on all the elements, in order to balance the machine.
Important: the bearing structure to which the anti-vibration mounts of the vibrating complex are fastened must be rigidly anchored to the ground or to some other type of bearing structure and always without any further anti-vibration elements.

Type of process	Specific weight	Sise	Vibrating force		Vibrations per minute							Accelerat. on the line of force a
			Rotat.	Gericht.	600 (50Hz)	750 (50Hz)	1000 (50Hz)	1500 (50Hz)	3000 (50Hz)	6000 (50Hz)	9000 (50Hz)	
					720 (60Hz)	900 (60Hz)	1200 (60Hz)	1800 (60Hz)	3600 (60Hz)	-	-	nxg
Conveying Separating Sieving Positioning Grading Sizing Extracting Feeding	A	F		●				●	●			4÷9
		M		●			●	●				4÷6
		G		●		●	●					3.5÷4.5
	B	F		●				●				5÷7
		M		●			●					4÷5.5
		G		●		●	●					3.5÷5.5
Filter cleaning	A/B	F	●					●	●			2÷3
Slackening and emptying material in silos, hoppers, etc.	A/B	F	●						●			Note (1)
	A/B	M	●						●			
	A/B	G	●					●	●			
Fluidized beds				●		●	●					2÷4
Separators (eg. for mills),				●	●	●						2÷4
Vibrating beds		F	●						●			0.7÷2
		M	●					●	●			
		G	●					●				
		F	●					●				
		M	●					●				
		G	●					●				
Compacting		F	●	●				●	●	●		2÷6
		M	●	●				●	●	●		
		G	●	●				●	●	●		
Compacting concrete	-	-	●	●					●	●	●	1÷2
Test benches (accelerated ageing)	-	-	●	●	●	●	●	●	●	●	●	0.5÷24

Key: Specific weight A = high B = low
Size F = fine G = coarse M = medium

Note (1): Centrifugal force of the electric vibrator = 0.1 ÷ 0.25 for weight of material cpntained in the vibrating apparatus conic part.

3000 rpm - 50 Hz

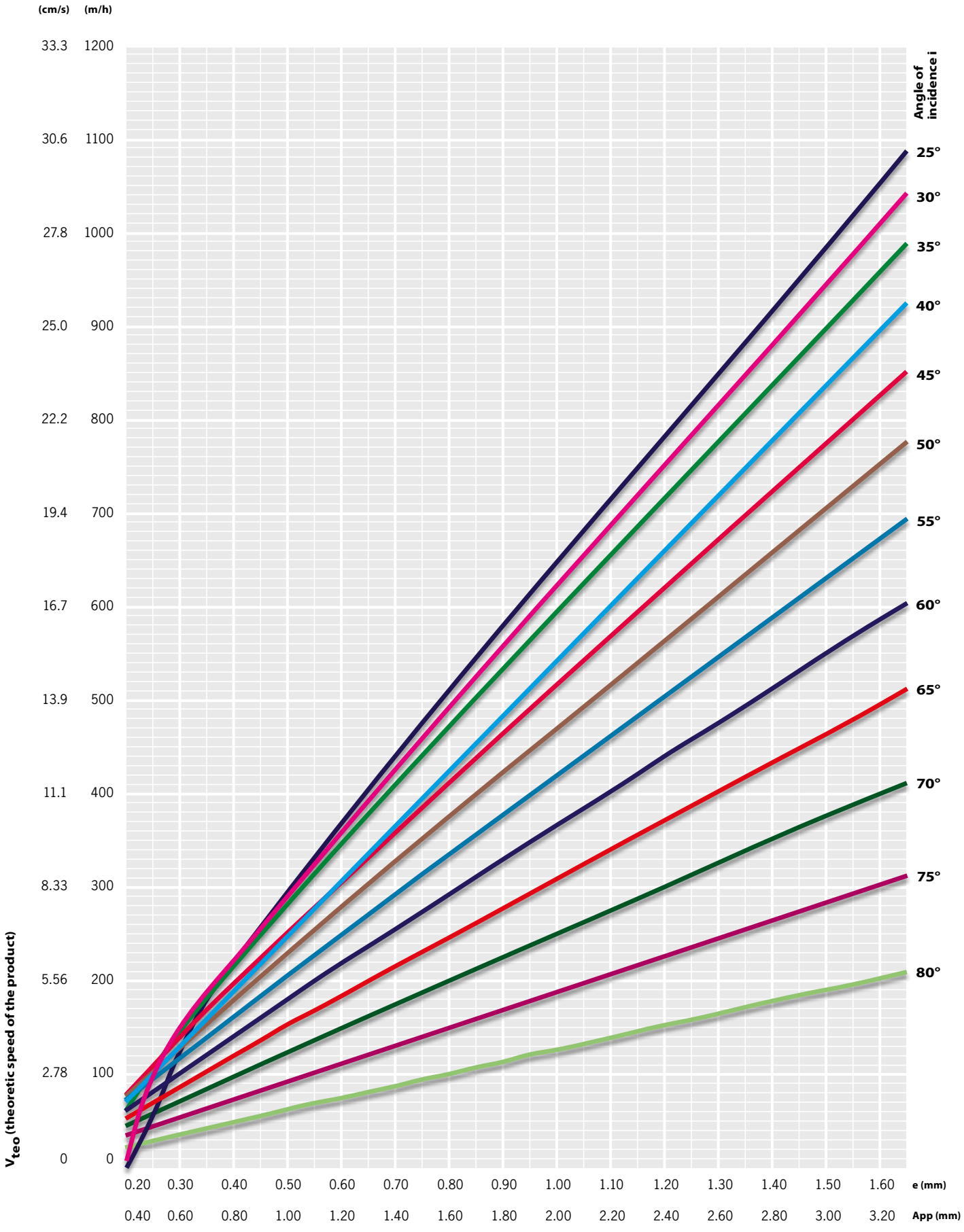

3600 rpm - 60 Hz

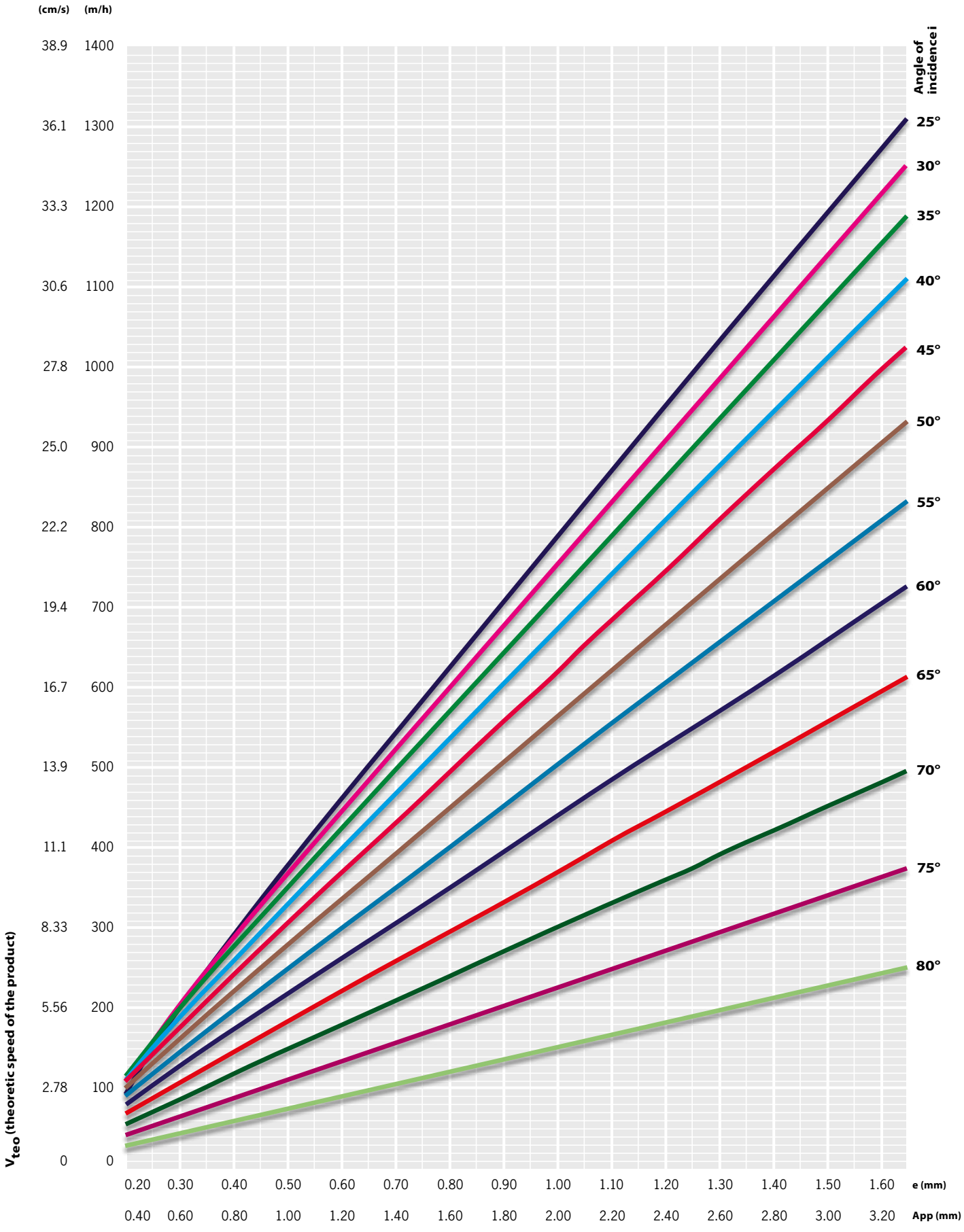

1500 rpm - 50 Hz

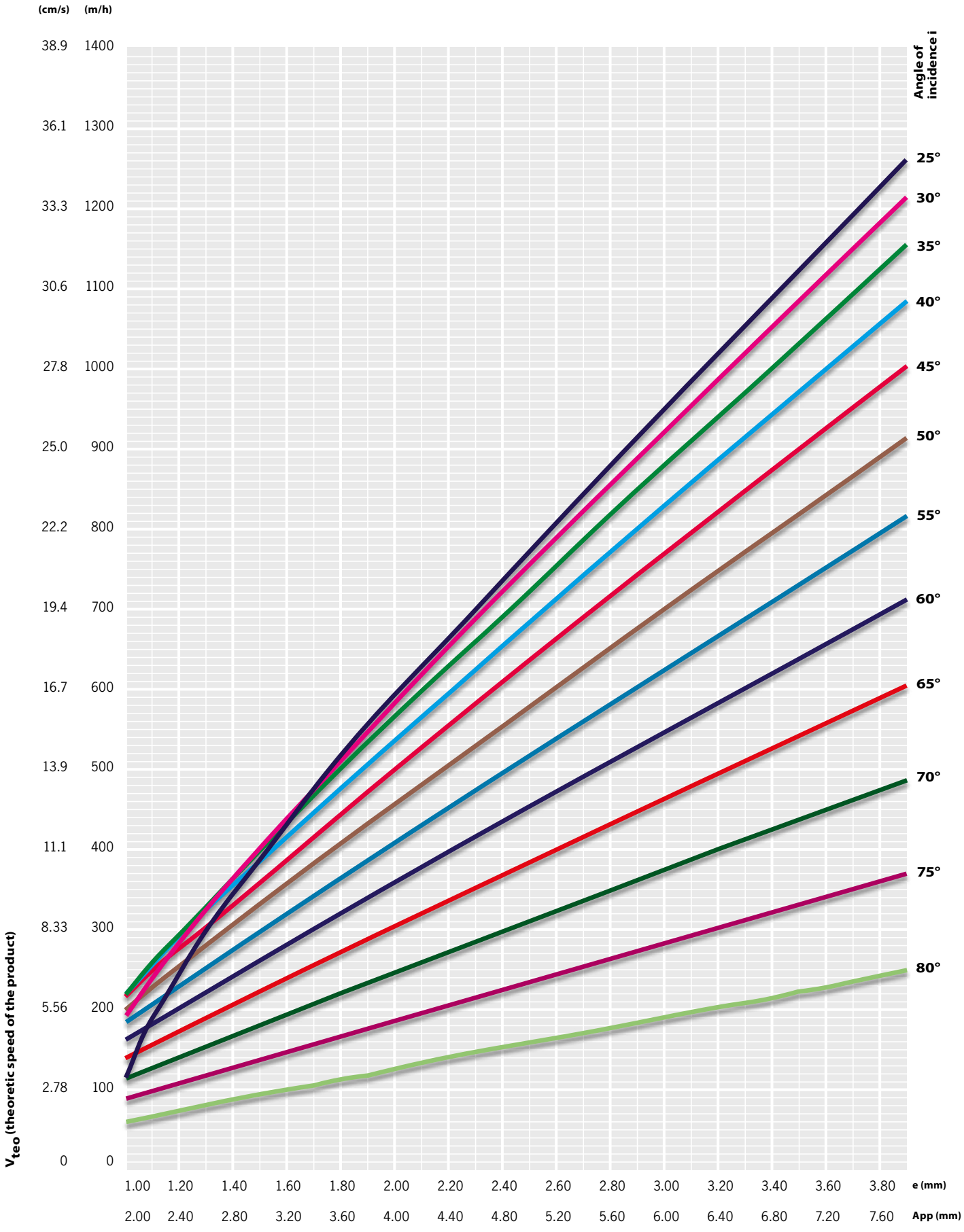

1800 rpm - 60 Hz

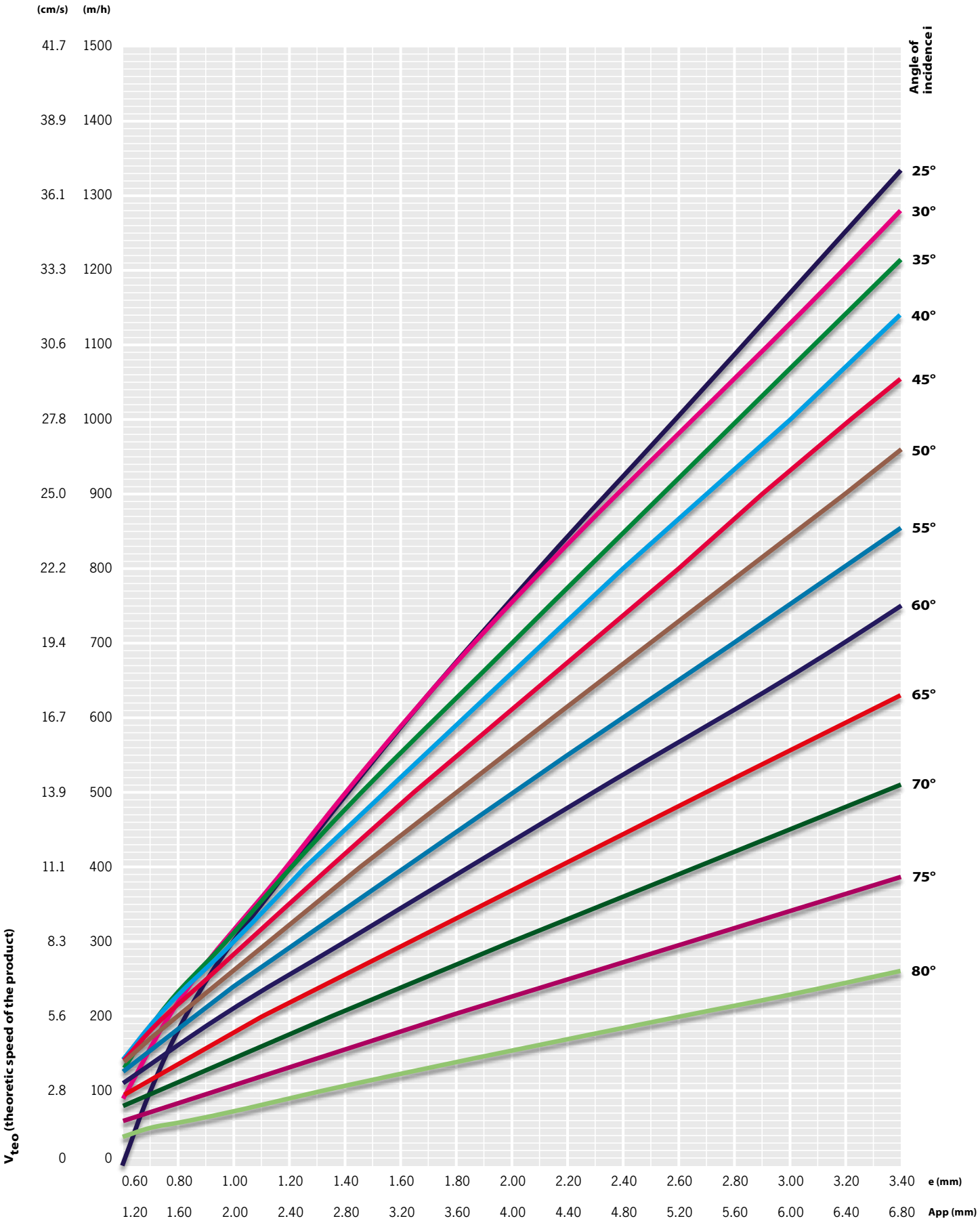

1000 rpm - 50 Hz

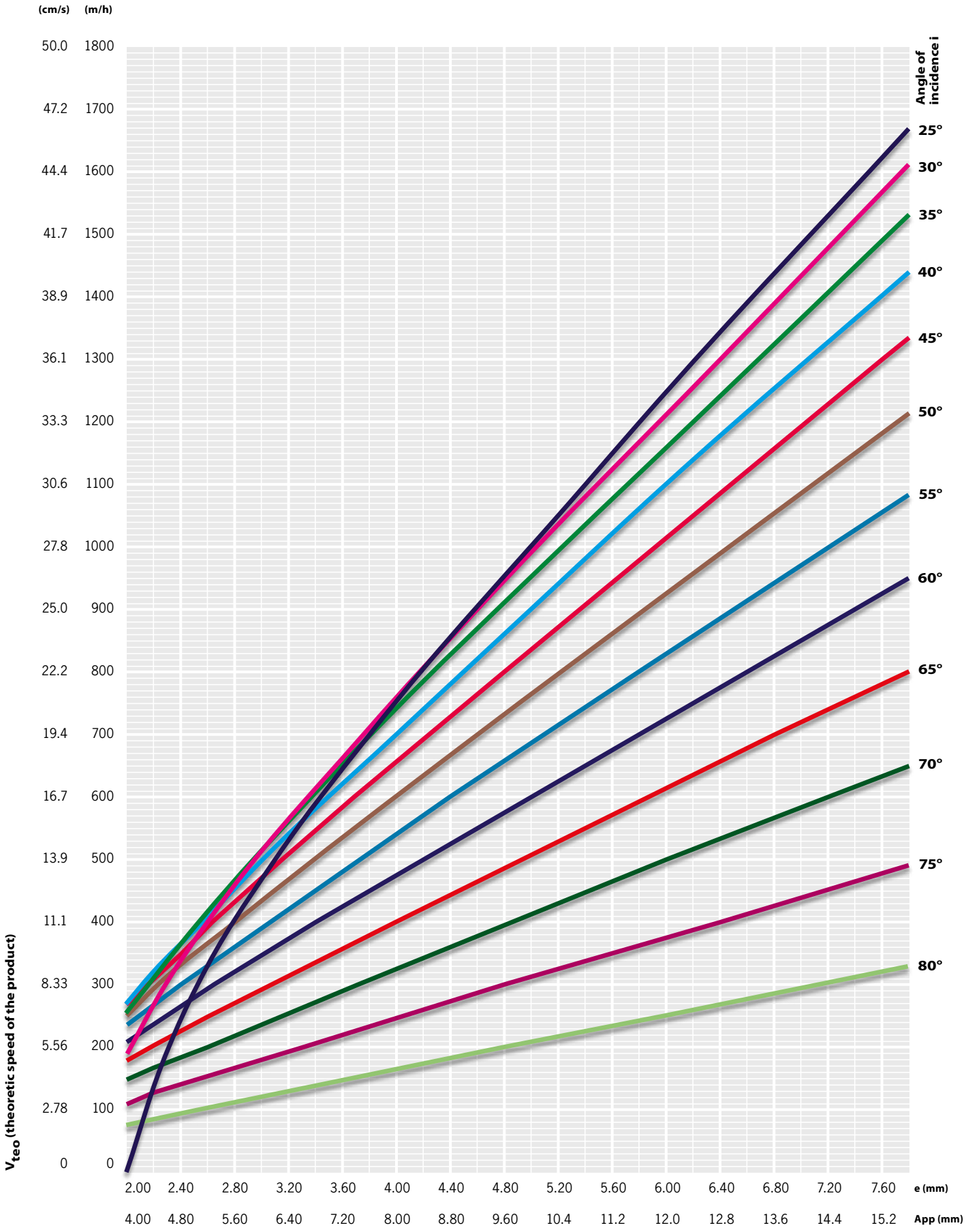

1200 rpm - 60 Hz

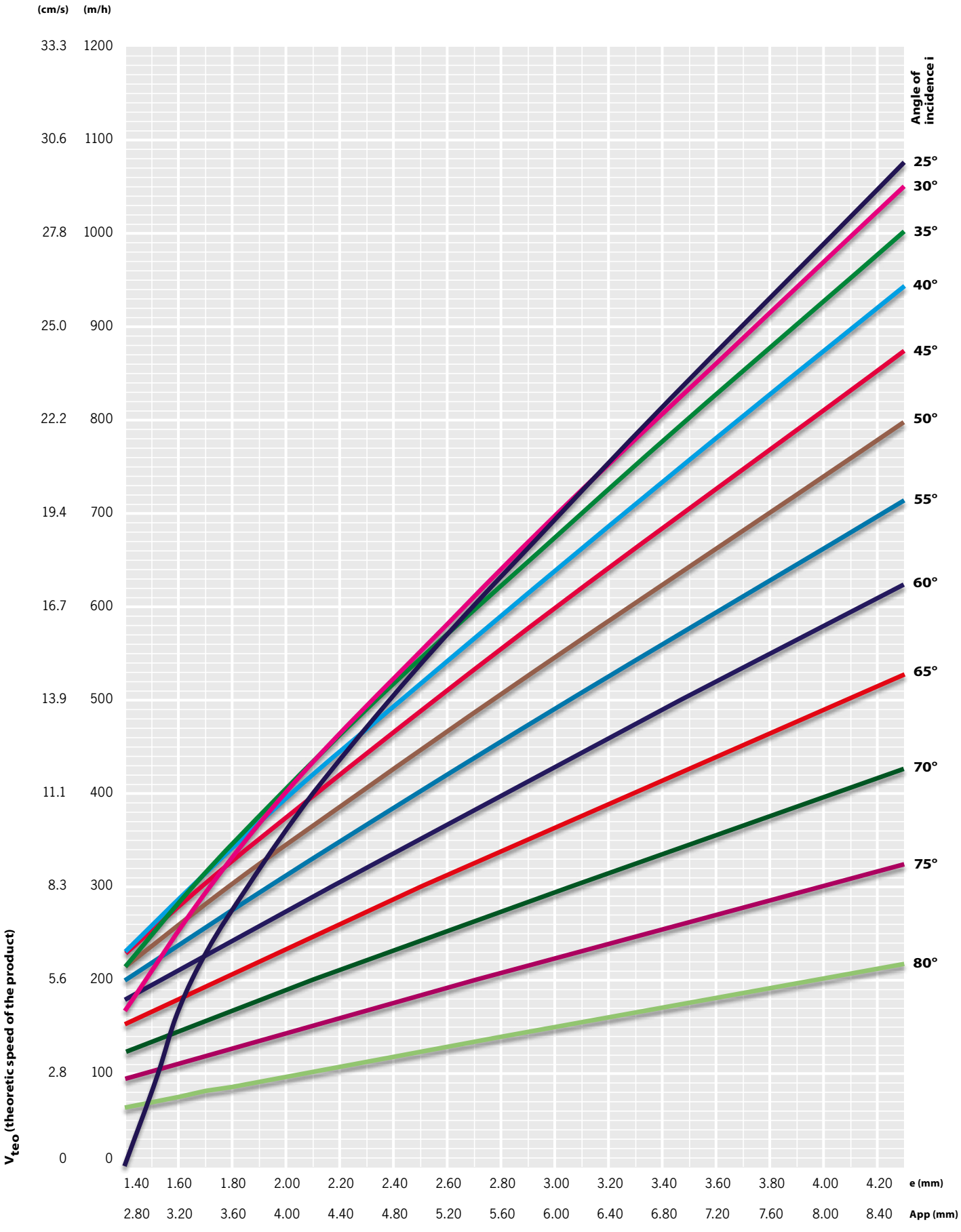

750 rpm - 50 Hz

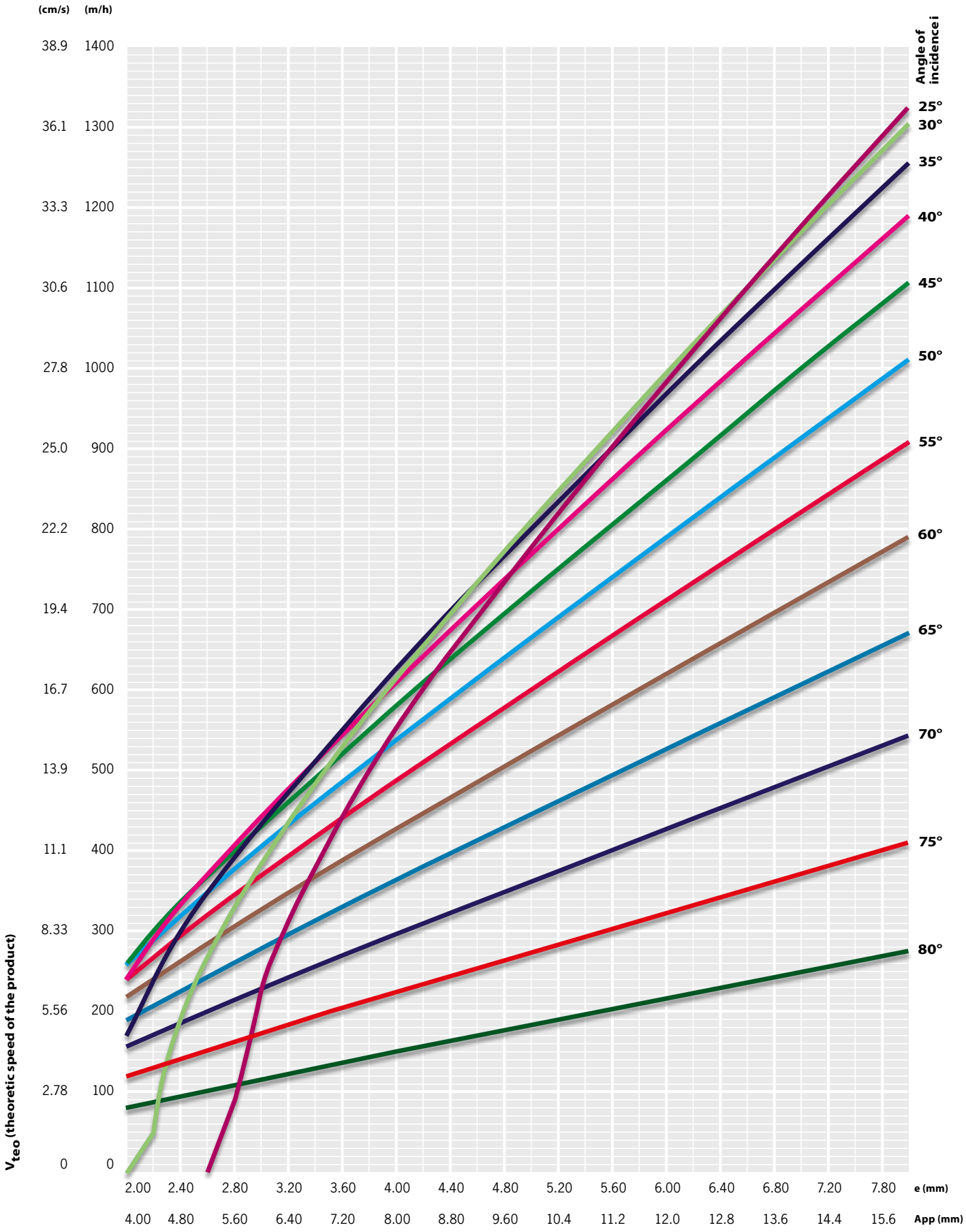
(cm/s)
(m/h)
38.9 1400
36.1 1300
33.3 1200
30.6 1100
27.8 1000
25.0 900
22.2 800
19.4 700
16.7 600
13.9 500
11.1 400
8.33 300
5.56 200
2.78 100
0 0
V_{teo} (theoretic speed of the product)
Angle of incidence i
25°
30°
35°
40°
45°
50°
55°
60°
65°
70°
75°
80°
2.00 2.40 2.80 3.20 3.60 4.00 4.40 4.80 5.20 5.60 6.00 6.40 6.80 7.20 7.80 e (mm)
4.00 4.80 5.60 6.40 7.20 8.00 8.80 9.60 10.4 11.2 12.0 12.8 13.6 14.4 15.6 App (mm)

900 rpm - 60 Hz

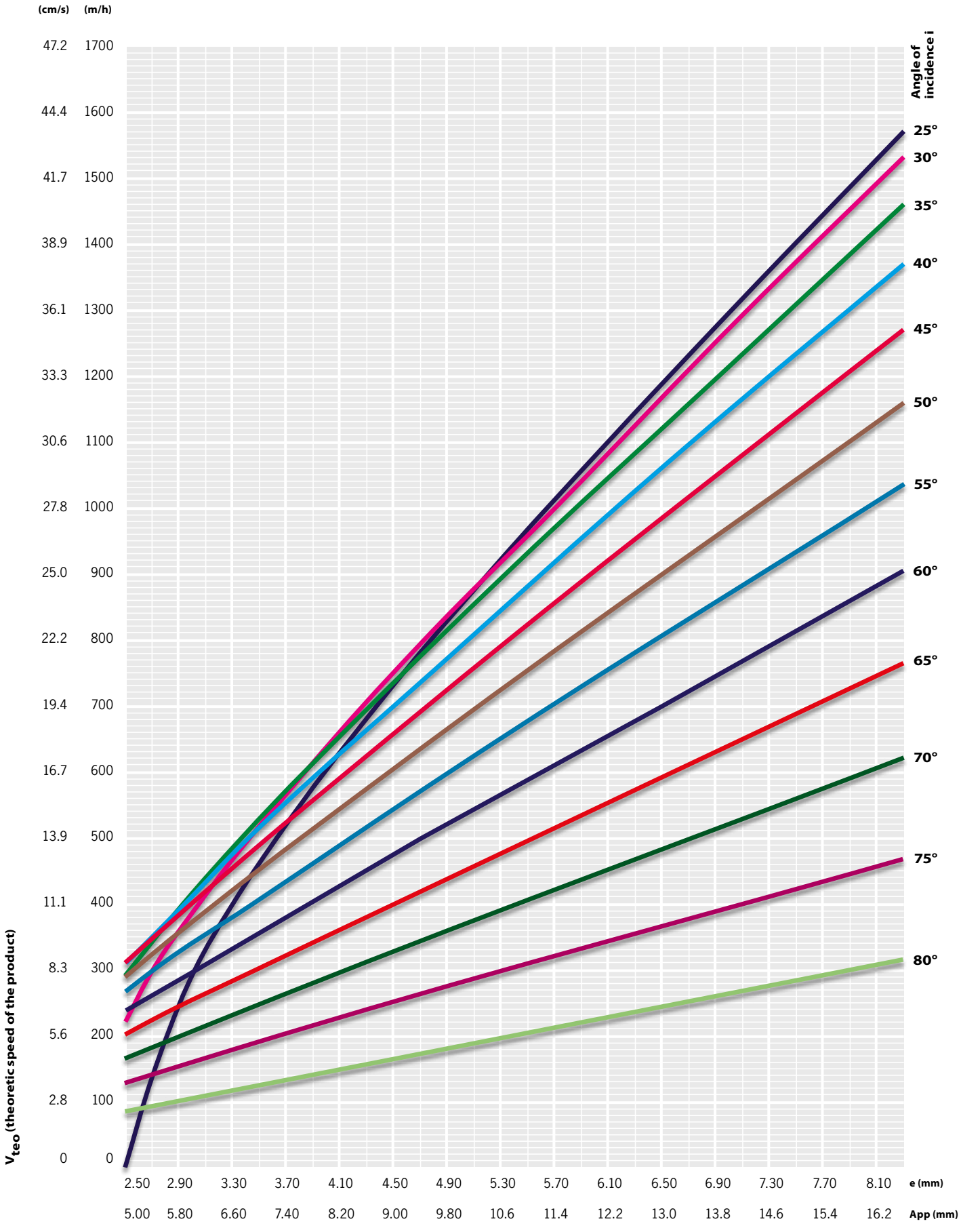
(cm/s)
(m/h)
47.2 1700
44.4 1600
41.7 1500
38.9 1400
36.1 1300
33.3 1200
30.6 1100
27.8 1000
25.0 900
22.2 800
19.4 700
16.7 600
13.9 500
11.1 400
8.3 300
5.6 200
2.8 100
0 0
V_{teo} (theoretic speed of the product)
Angle of incidence i
25°
30°
35°
40°
45°
50°
55°
60°
65°
70°
75°
80°
2.50 2.90 3.30 3.70 4.10 4.50 4.90 5.30 5.70 6.10 6.50 6.90 7.30 7.70 8.10 e (mm)
5.00 5.80 6.60 7.40 8.20 9.00 9.80 10.6 11.4 12.2 13.0 13.8 14.6 15.4 16.2 App (mm)

600 rpm - 50 Hz

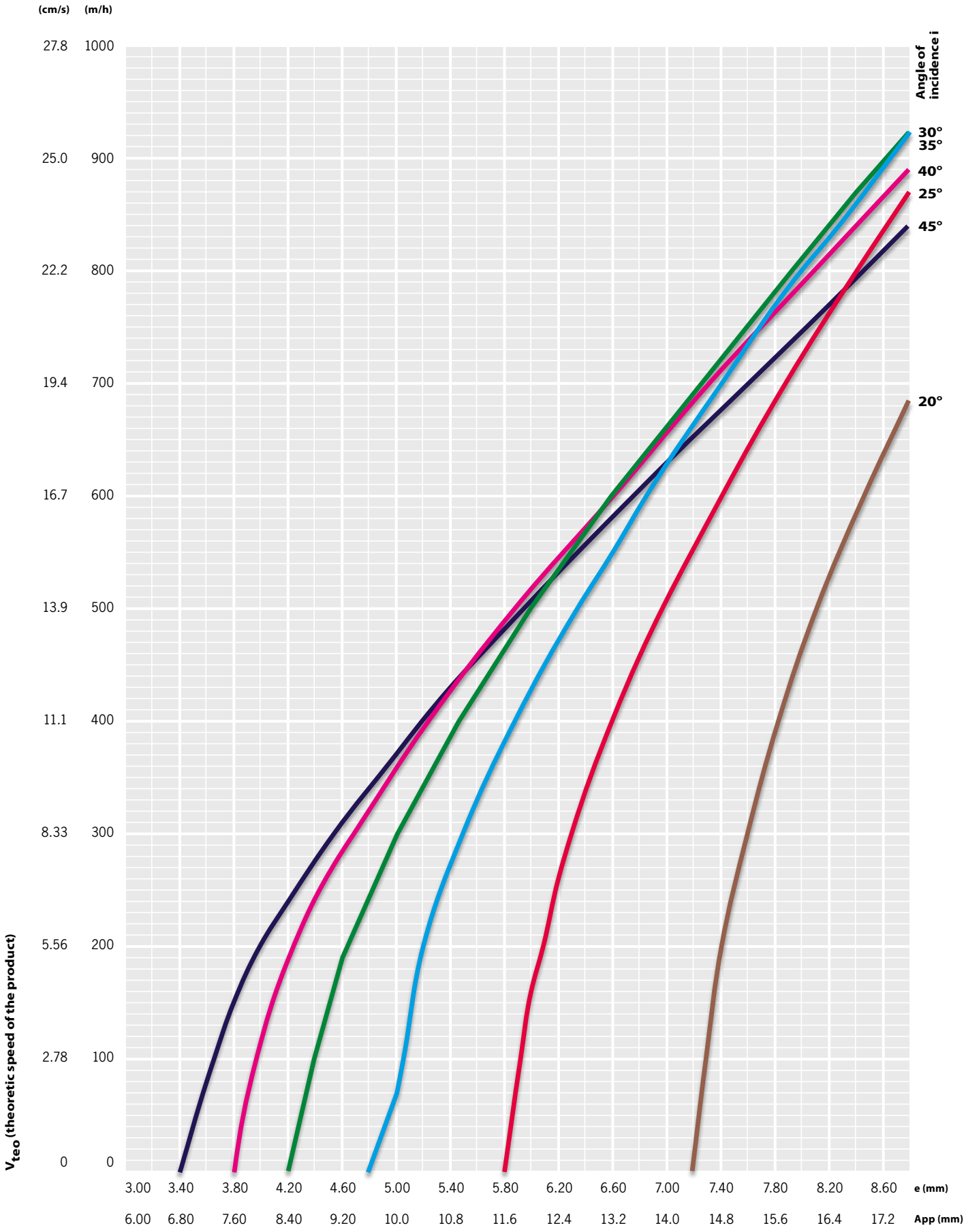
(cm/s)
(m/h)
27.8 1000
25.0 900
22.2 800
19.4 700
16.7 600
13.9 500
11.1 400
8.33 300
5.56 200
2.78 100
0 0
V_{teo} (theoretic speed of the product)
Angle of incidence i
30°
35°
40°
25°
45°
20°
3.00 3.40 3.80 4.20 4.60 5.00 5.40 5.80 6.20 6.60 7.00 7.40 7.80 8.20 8.60 e (mm)
6.00 6.80 7.60 8.40 9.20 10.0 10.8 11.6 12.4 13.2 14.0 14.8 15.6 16.4 17.2 App (mm)

720 rpm - 60 Hz

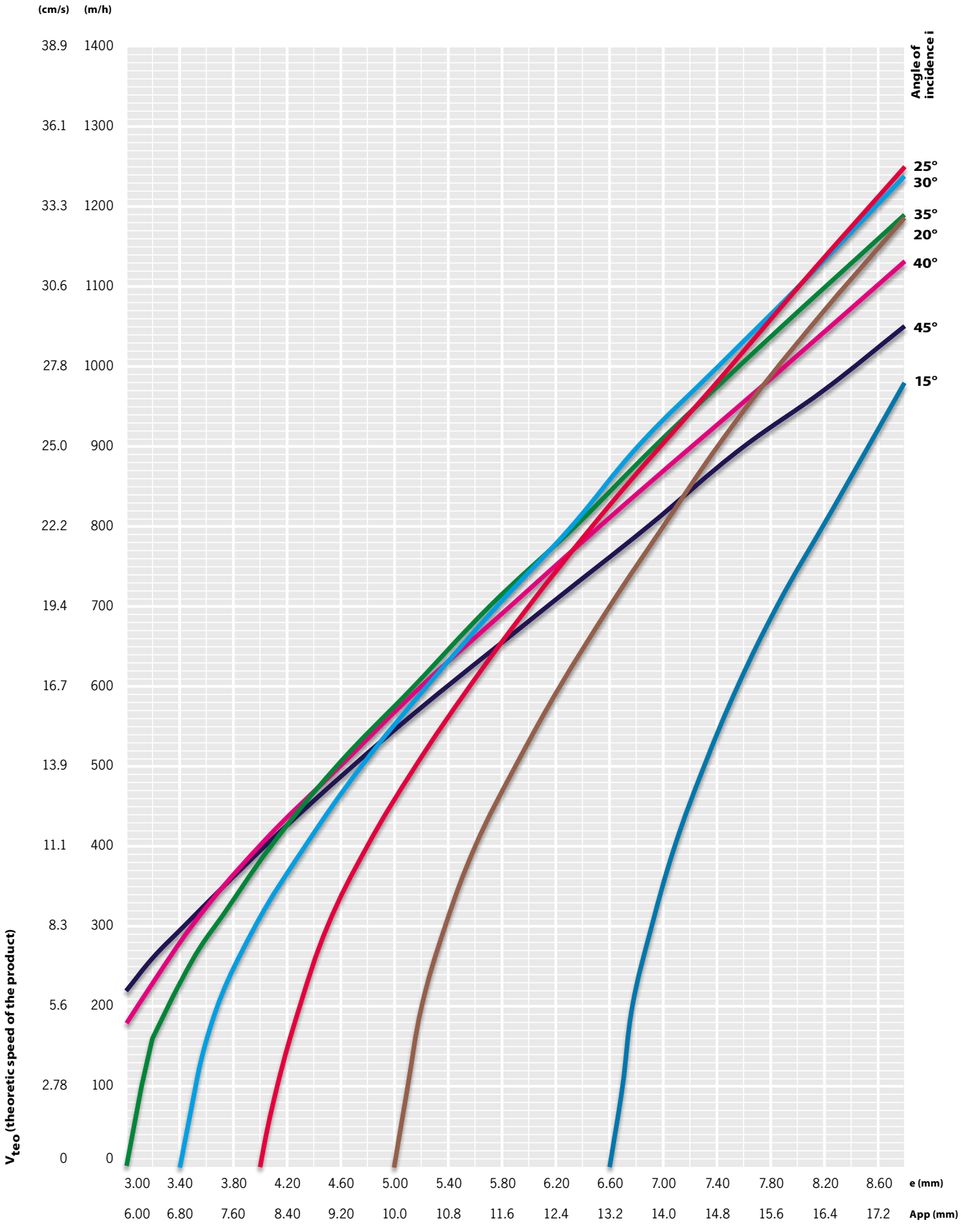
(cm/s)
(m/h)
38.9 1400
36.1 1300
33.3 1200
30.6 1100
27.8 1000
25.0 900
22.2 800
19.4 700
16.7 600
13.9 500
11.1 400
8.3 300
5.6 200
2.78 100
0 0
V_{teo} (theoretic speed of the product)
Angle of incidence i
25°
30°
35°
20°
40°
45°
15°
3.00 3.40 3.80 4.20 4.60 5.00 5.40 5.80 6.20 6.60 7.00 7.40 7.80 8.20 8.60 e (mm)
6.00 6.80 7.60 8.40 9.20 10.0 10.8 11.6 12.4 13.2 14.0 14.8 15.6 16.4 17.2 App (mm)

The technical data and models presented in this catalogue are not binding. The manufacturer reserves the right to modify them without prior notice.

The photographs, diagrams and descriptions herein are the property of Italvibras S.p.A. Duplication, even when only partial, is forbibben without written authorization form the manufacturer.

italvibras
g.silingardi